MINOR SUBDIVISION
TAX LOT 7 BLOCK 207
277 SOUTH PLAINFIELD AVENUE
BOROUGH OF SOUTH PLAINFIELD, MIDDLESEX COUNTY, NEW JERSEY

200' OWNERS LIST

Block	Lot	Owner	Owner's Address			
201	14.03	TAYLOR,JOHN P & JACQUELINE C	170 TEN EYCK ST	South Plainfield	NJ	07080
201	14.04	HURST, BRIAN A & DEANNA C	174 TEN EYCK ST	South Plainfield	NJ	07080
201	14.05	LEWCZAK, ERIC & ROSEMARY	178 TEN EYCK ST	South Plainfield	NJ	07080
201	26	ROSEN, GARY & HENRIETTA	283 MINFORD AVE	South Plainfield	NJ	07080
201	27	LUKS, SCOTT & MELISSA	279 MINFORD AVENUE	South Plainfield	NJ	07080
201	35	CANAVARI,JOSEPH & O'BRIEN,VALERIE A	266 ADA PL	South Plainfield	NJ	07080
201	36	LUSTER, MARC & KIMBERLY	270 ADA PL.	South Plainfield	NJ	07080
201	37	PETERSON, MATTHEW (V) & ELLEN	274 ADA PL	South Plainfield	NJ	07080
201	38	GARCIA,YRMA & SECUNDINO	278 ADA PLACE	South Plainfield	NJ	07080
201	39	CAMPOS, MARIA MARTHA	282 ADA PL.	South Plainfield	NJ	07080
201	40	MAUA, GERARD J & PATRICIA M	281 ADA PL	South Plainfield	NJ	07080
201	41	BARNES, FRANCIS X & CAROL ANN	277 ADA PL	South Plainfield	NJ	07080
201	42	HLAVKA, JOHN A. & PATRICIA A.	273 ADA PLACE	South Plainfield	NJ	07080
207	1	BISHOP,JAMES ALAN & JANE A.	280 MINFORD AVE.	South Plainfield	NJ	07080
207	2	DEO, CARMEN & CUNHA, JESSICA	284 MINFORD AVE	South Plainfield	NJ	07080
207	5	LACERDA, JACINTO JR & ANDREA	283 SO PLAINFIELD AVE	South Plainfield	NJ	07080
207	6	FORBES,GREGORY J&KAREN E	279 SOUTH PLAINFIELD AVE	South Plainfield	NJ	07080
207	7	DE OLIVEIRA,ANTONIO & KAREN	277 SOUTH PLAINFIELD AVE.	South Plainfield	NJ	07080
207	8	SPALL,ZUNAIRA A & SHABBIR,MOHAMMAD	275 SOUTH PLAINFIELD AVE	South Plainfield	NJ	07080
207	9	MERKLER, STEVEN & STACY	265 SOUTH PLAINFIELD AVE.	South Plainfield	NJ	07080
207	14	GRARE FAMILY SPECIAL NEEDS TRUST	21 EDGEMERE TERRACE	Washington	NJ	07882
248	1	MCGRATH, PETER J	400 COTTON ST	South Plainfield	NJ	07080
248	8	PASACRITA, BRIAN D(V) & EMELY D	405 PIERCE ST	South Plainfield	NJ	07080
248	9	ZARRA, DAVID	401 PIERCE STREET	South Plainfield	NJ	07080
249	4	SIDUN, MICHAEL & MUNOZ, MELODIE	404 PIERCE ST	South Plainfield	NJ	07080
249	5	LEONARDIS FAMILY TRUST	3281 EVERGREEN LN	South Plainfield	NJ	07080
249	6.01	CULLEN, FRANCIS R(V) & ANGELINA	266 SOUTH PLAINFIELD AVE	South Plainfield	NJ	07080
249	6.02	WALSH, BARBARA	405 VAIL CT	South Plainfield	NJ	07080

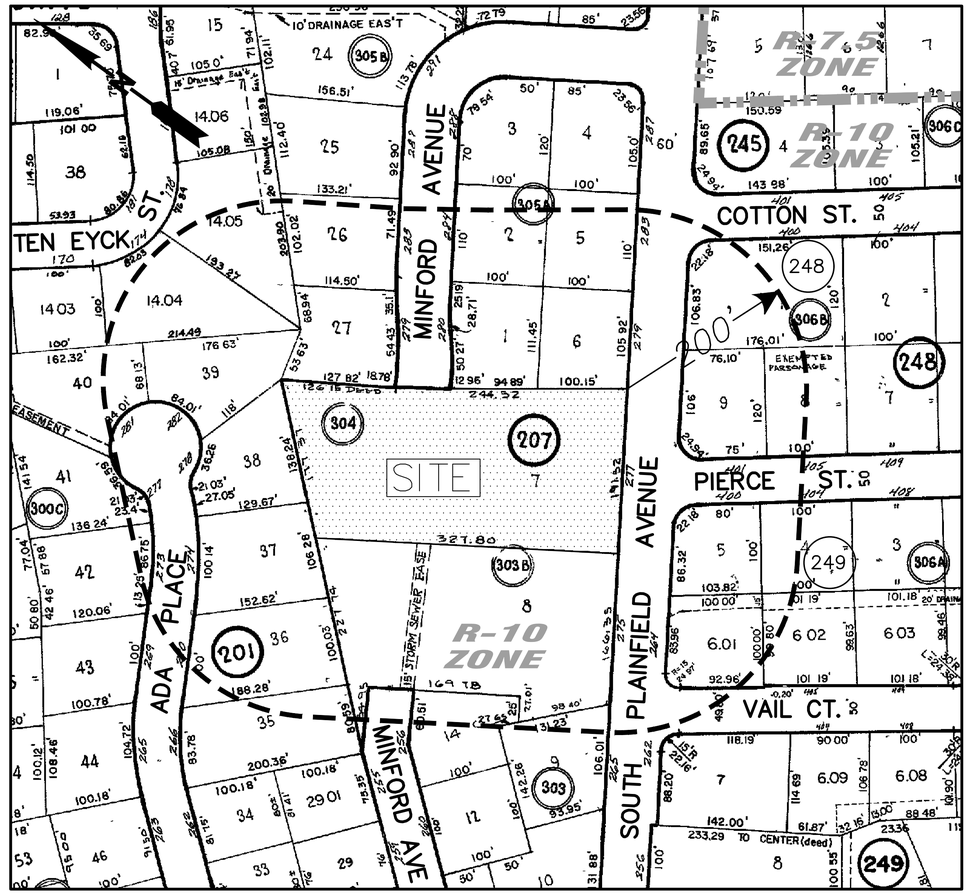

TAX MAP & 200' RADIUS MAP
SCALE: 1" = 80'

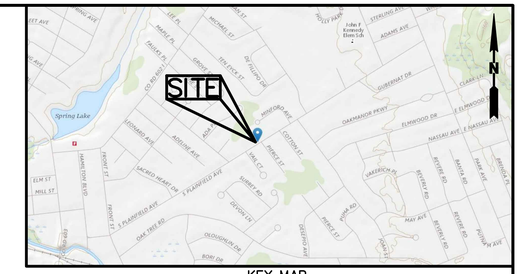

KEY MAP
SCALE: 1" =1,000'

200' RADIUS AERIAL MAP — EXISTING DRIVEWAY LOCATIONS WITHIN 200'
SCALE: 1" =200'

GENERAL NOTES:

1. THIS DRAWING REFERENCES A BOUNDARY & TOPOGRAPHIC SURVEY PREPARED BY:

   EKA ASSOCIATES, P.A.
   328 PARK AVENUE
   SCOTCH PLAINS, NJ 07076
   DATED 11-26-2019
   REVISED 1-6-2020

2. THIS PARCEL IS KNOWN AS LOT 7 IN BLOCK 207 AS SHOWN ON SHEET 17 OF THE TAX MAPS OF THE BOROUGH OF SOUTH PLAINFIELD.
3. AREA OF PARCEL = 63,569 S.F. OR 1.459 ACRES
4. THIS PARCEL IS LOCATED ENTIRELY IN THE R-10 ZONE AS SHOWN ON THE ZONING MAP OF THE BOROUGH OF SOUTH PLAINFIELD.
5. THIS PARCEL MAY BE SUBJECT TO UNDERGROUND UTILITIES AND/OR EASEMENTS WHICH ARE NOT SHOWN.
6. IF THIS DOCUMENT DOES NOT CONTAIN A RAISED IMPRESSION SEAL OF THE PROFESSIONAL, IT IS NOT AN AUTHORIZED ORIGINAL AND MAY HAVE BEEN ALTERED.
7. NO DETERMINATION WAS MADE AS TO THE PRESENCE AND/OR NONEXISTENCE OF TOXIC WASTES OR WETLANDS. ALSO NO DETERMINATION OF DEPTH TO GROUND WATER WAS MADE. THE CLIENT SHOULD PURSUE THESE MATTERS AS ITEMS SEPARATE AND APART FROM THIS PLAN.
8. DATUM INFORMATION: ELEVATIONS SHOWN HEREON ARE BASED UPON AN ASSUMED ELEVATION. LOCAL BENCHMARK IS THE RIM OF A SANITARY SEWER APPROXIMATELY 25' SOUTHWESTERLY FROM THE SOUTHEASTERLY CORNER OF TAX LOT 7, BLOCK 207 (THE SUBJECT PROPERTY).
   RIM ELEVATION = 100.25 (ASSUMED)
9. DO NOT SCALE DRAWINGS FOR LOCATIONS OF ADJACENT STRUCTURES AND SURROUNDING PHYSICAL CONDITIONS. THESE ITEMS MAY BE SCHEMATIC ONLY EXCEPT WHERE DIMENSIONS ARE SHOWN THERETO.
10. THIS IS A SUBDIVISION PLAN AND UNLESS SPECIFICALLY NOTED ELSEWHERE HEREON IS NOT A SURVEY.
11. THIS PLAN HAS BEEN PREPARED FOR PURPOSES OF MUNICIPAL AND AGENCY REVIEW AND APPROVAL. THIS PLAN SHALL NOT BE UTILIZED AS CONSTRUCTION DOCUMENTS OR DIGITAL STAKEOUT UNTIL ALL CONDITIONS OF APPROVAL HAVE BEEN SATISFIED AND THE DRAWINGS MARKED "ISSUED FOR CONSTRUCTION AND DIGITAL STAKEOUT".
12. EXISTING UTILITY INFORMATION SHOWN HEREON HAS BEEN COLLECTED FROM VARIOUS SOURCES AND IS NOT GUARANTEED AS TO ACCURACY AND COMPLETENESS. THE CONTRACTOR SHALL VERIFY ALL UTILITY INFORMATION TO HIS SATISFACTION PRIOR TO COMMENCEMENT OF ANY WORK. THE CONTRACTOR SHALL PERFORM TEST PITS WHERE EXISTING UTILITIES ARE TO BE CROSSED. TEST PIT INFORMATION SHALL BE GIVEN TO THE ENGINEER PRIOR TO CONSTRUCTION TO PERMIT ADJUSTMENTS AS MAY BE REQUIRED TO AVOID CONFLICTS.
13. CONTRACTOR SHALL NOTIFY THE UNDERSIGNED PROFESSIONAL IMMEDIATELY IF ANY FIELD CONDITIONS ENCOUNTERED DIFFER FROM THOSE SHOWN HEREON.
14. ALL MATERIAL, WORKMANSHIP AND CONSTRUCTION FOR SITE IMPROVEMENTS SHOWN HEREON SHALL BE IN ACCORDANCE WITH:
    - NJDOT "STANDARD SPECIFICATIONS FOR ROAD AND BRIDGE CONSTRUCTION", AS CURRENTLY AMENDED.
    - CURRENT PREVAILING MUNICIPAL AND/OR COUNTY SPECIFICATIONS, STANDARDS, AND REQUIREMENTS.
    - CURRENT PREVAILING UTILITY COMPANY/AUTHORITY SPECIFICATIONS, STANDARDS, AND REQUIREMENTS.
15. ALL EXISTING IMPERVIOUS SURFACES NOT TO REMAIN SHALL BE RESTORED WITH A MINIMUM OF 5" TOPSOIL SEED AND MULCH
16. THIS SITE IS LOCATED IN ZONE X (AREAS DETERMINED TO BE OUTSIDE THE 0.2% ANNUAL CHANCE FLOODPLAIN) AS PER THE FLOOD INSURANCE RATE MAP PANEL 34 OF 286 (MAP No. 34023C0034F DATED JULY 6, 2010).
17. ALL PROPOSED DOWNSPOUTS SHALL BE CONNECTED TO UNDERGROUND ROOF LEADER COLLECTION SYSTEM.
18. PER N.J.A.C. 7:14A-23.a, THE DEVELOPMENT PLAN PROPOSES A PROJECTED FLOW OF 300 G.P.D. TO THE EXISTING SANITARY SEWER MAIN WHICH TRAVERSES THE SUBJECT PROPERTY AT THE SOUTHEASTERLY PROPERTY CORNER. A TREATMENT WORKS APPROVAL IS NOT REQUIRED FOR THIS PROJECT.
19. THIS MINOR SUBDIVISION SHALL BE PERFECTED BY DEED.

SCHEDULE OF GENERAL REQUIREMENTS

ZONE R-10
EXISTING USE: SINGLE FAMILY RESIDENTIAL (PERMITTED USE)
PROPOSED USE: SINGLE FAMILY RESIDENTIAL (PERMITTED USE)

REGULATION	REQUIREMENT	EXISTING LOT 7	PROPOSED LOT 7.01	PROPOSED LOT 7.02
MIN. LOT AREA	10,000 S.F.	63,569 S.F.	36,484 S.F.	27,085 S.F.
MIN. LOT WIDTH	100'	189.36'	189.36'	82.45'(V)
MIN. LOT DEPTH	100'	349.74'	196.40'	179.30'
MIN. FRONT SETBACK	30'	75.29'	75.29'	54.26'
MIN. REAR SETBACK	20'	161.10'	20'	65.18'
MIN. SIDE SETBACK (EACH SIDE)	8'	41.85'	41.85'	27.46'
MAX. LOT COVERAGE (BUILDINGS/STRUCTURES)	25%(1)	9.3%	16.2%	14.4%
MAX. BUILDING HEIGHT	35'	<35'	<35'	27.65'
ACCESSORY BUILDING REQUIREMENTS				
MIN. REAR YARD SETBACK	5'	133.35'	7'	N/A
MIN. SIDE YARD SETBACK	5'	8.13'	24'	N/A

* – DENOTES EXISTING VIOLATION
(V) – DENOTES VARIANCE REQUIRED

ADDITIONAL ORDINANCE RELIEF

(1) FOR THE R-10 ZONE, AN ADDITIONAL 10% LOT COVERAGE SHALL BE ALLOWED WHEN LOT COVERAGE IS EXCEEDED DUE TO POOLS AND SHEDS. LOT COVERAGE SHALL NOT EXCEED 35% TOTAL COVERAGE.

APPROVALS

APPROVED BY THE PLANNING BOARD OF THE BOROUGH OF SOUTH PLAINFIELD, MIDDLESEX COUNTY, NEW JERSEY.

SECRETARY — DATE

CHAIRMAN — DATE

I HAVE CAREFULLY EXAMINED THIS MAP AND FIND IT COMPLIES WITH THE MUNICIPAL ORDINANCES AND REQUIREMENTS THERETO.

BOARD ENGINEER — DATE

APPLICANT

NUNO CASTAINCA
16 UNIVERSAL AVENUE
SOUTH PLAINFIELD, NJ 07080

I HEREBY CERTIFY THAT I AM THE APPLICANT OF THIS PLAN AND I APPROVE THE FILING OF THIS PLAN WITH THE PLANNING BOARD OF THE BOROUGH OF SOUTH PLAINFIELD

(SIGNATURE) — DATE

OWNER

KAREN & ANTONIO DE OLIVEIRA
277 SOUTH PLAINFIELD AVENUE
SOUTH PLAINFIELD, NJ 07080

I HEREBY CERTIFY THAT I AM OWNER OF RECORD OF THE SITE HEREIN DEPICTED AND THAT I CONCUR WITH THE PLAN.

(SIGNATURE) — DATE

SHEET	TITLE	ISSUED	REVISED
1	COVER SHEET	1/29/2020	4/29/2020
2	MINOR SUBDIVISION PLAN	1/29/2020	4/29/2020
3	GRADING, DRAINAGE & UTILITY PLAN	1/29/2020	4/29/2020
4	SOIL EROSION & SEDIMENT CONTROL PLAN	1/29/2020	4/29/2020
5	SOIL EROSION & SEDIMENT CONTROL NOTES & DETAILS	1/29/2020	4/29/2020
6	CONSTRUCTION DETAILS	1/29/2020	4/29/2020
1 OF 1	BOUNDARY & TOPOGRAPHIC SURVEY	11/26/19	1/6/2020

COVER SHEET
MINOR SUBDIVISION
TAX LOT 7 BLOCK 207
BOROUGH OF SOUTH PLAINFIELD, MIDDLESEX COUNTY, NEW JERSEY

EKA ASSOCIATES, P.A.
Engineers • Surveyors • Planners
328 Park Avenue, Scotch Plains, N.J. 07076
908-322-2030

REVISIONS:
4-29-2020: REVISED PER BOARD PLANNER TO SHIFT NEW PROPERTY LINE

James R. Watson 4/29/2020
JAMES R. WATSON P.L.S., P.P.
PROFESSIONAL LAND SURVEYOR — N.J. LICENSE NO. 30750 — N.Y. LICENSE NO. 50196
PROFESSIONAL PLANNER — N.J. LICENSE NO. 3363

Job No. 847319	Date 1/29/2020	Scale AS SHOWN	Drawn SK	Map No. FILE	Sheet 1 of 6

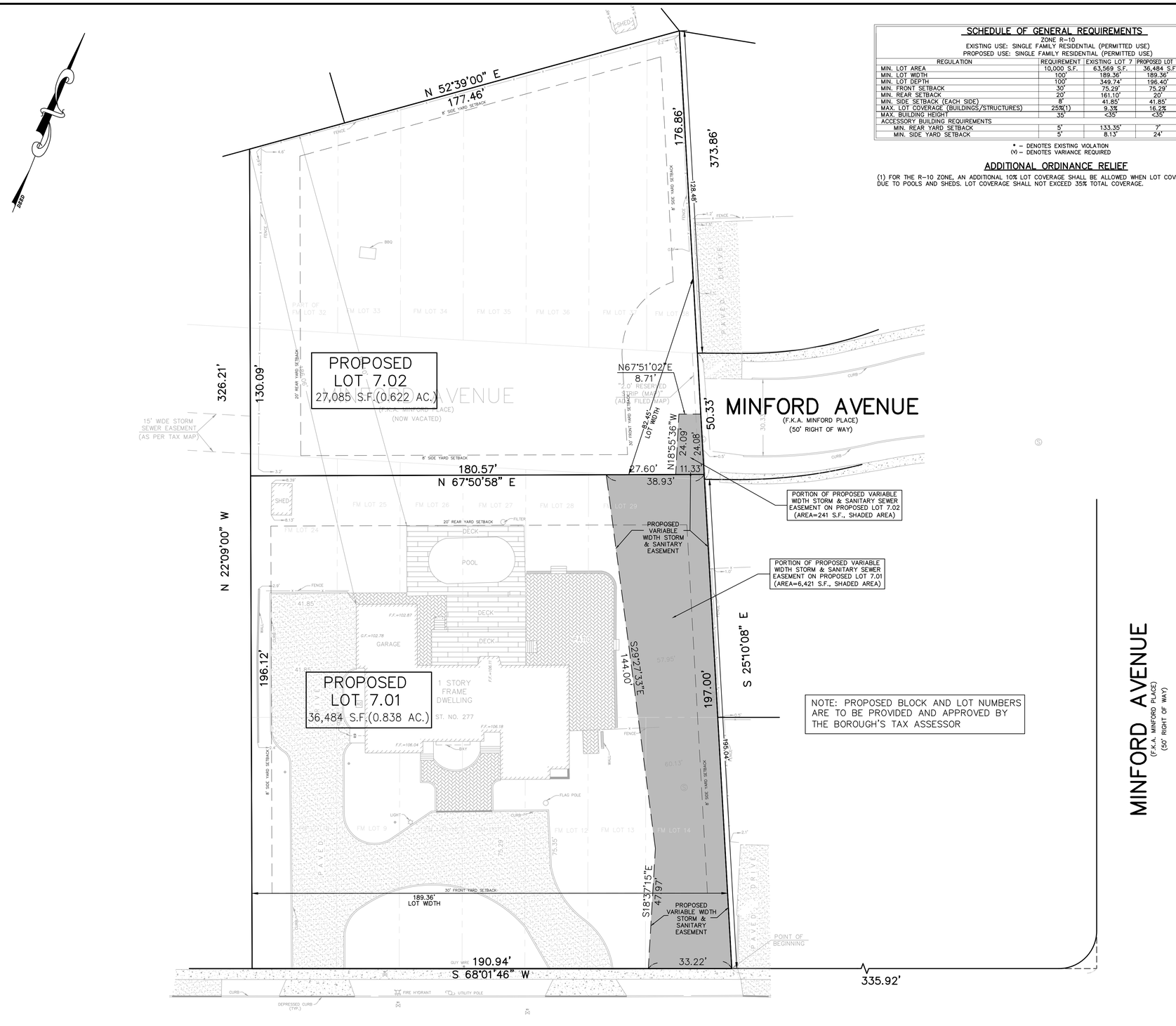

SCHEDULE OF GENERAL REQUIREMENTS

ZONE R-10
EXISTING USE: SINGLE FAMILY RESIDENTIAL (PERMITTED USE)
PROPOSED USE: SINGLE FAMILY RESIDENTIAL (PERMITTED USE)

REGULATION	REQUIREMENT	EXISTING LOT 7	PROPOSED LOT 7.01	PROPOSED LOT 7.02
MIN. LOT AREA	10,000 S.F.	63,569 S.F.	36,484 S.F.	27,085 S.F.
MIN. LOT WIDTH	100'	189.36'	189.36'	82.45'(V)
MIN. LOT DEPTH	100'	349.74'	196.40'	179.30'
MIN. FRONT SETBACK	30'	75.29'	75.29'	54.26'
MIN. REAR SETBACK	20'	161.10'	20'	65.18'
MIN. SIDE SETBACK (EACH SIDE)	8'	41.85'	41.85'	27.46'
MAX. LOT COVERAGE (BUILDINGS/STRUCTURES)	25%(1)	9.3%	16.2%	14.4%
MAX. BUILDING HEIGHT	35'	<35'	<35'	27.65'
ACCESSORY BUILDING REQUIREMENTS				
MIN. REAR YARD SETBACK	5'	133.35'	7'	N/A
MIN. SIDE YARD SETBACK	5'	8.13'	24'	N/A

* – DENOTES EXISTING VIOLATION
(V) – DENOTES VARIANCE REQUIRED

ADDITIONAL ORDINANCE RELIEF

(1) FOR THE R-10 ZONE, AN ADDITIONAL 10% LOT COVERAGE SHALL BE ALLOWED WHEN LOT COVERAGE IS EXCEEDED DUE TO POOLS AND SHEDS. LOT COVERAGE SHALL NOT EXCEED 35% TOTAL COVERAGE.

GENERAL NOTES:

1. THIS DRAWING REFERENCES A BOUNDARY & TOPOGRAPHIC SURVEY PREPARED BY:

   EKA ASSOCIATES, P.A.
   328 PARK AVENUE
   SCOTCH PLAINS, NJ 07076
   DATED 11-26-2019
   REVISED 1-6-2020

2. THIS PARCEL IS KNOWN AS LOT 7 IN BLOCK 207 AS SHOWN ON SHEET 17 OF THE TAX MAPS OF THE BOROUGH OF SOUTH PLAINFIELD.
3. AREA OF PARCEL = 63,569 S.F. OR 1.459 ACRES
4. THIS PARCEL IS LOCATED ENTIRELY IN THE R-10 ZONE AS SHOWN ON THE ZONING MAP OF THE BOROUGH OF SOUTH PLAINFIELD.
5. THIS PARCEL MAY BE SUBJECT TO UNDERGROUND UTILITIES AND/OR EASEMENTS WHICH ARE NOT SHOWN.
6. IF THIS DOCUMENT DOES NOT CONTAIN A RAISED IMPRESSION SEAL OF THE PROFESSIONAL, IT IS NOT AN AUTHORIZED ORIGINAL AND MAY HAVE BEEN ALTERED.
7. NO DETERMINATION WAS MADE AS TO THE PRESENCE AND/OR NONEXISTENCE OF TOXIC WASTES OR WETLANDS. ALSO NO DETERMINATION OF DEPTH TO GROUND WATER WAS MADE. THE CLIENT SHOULD PURSUE THESE MATTERS AS ITEMS SEPARATE AND APART FROM THIS PLAN.
8. DATUM INFORMATION: ELEVATIONS SHOWN HEREON ARE BASED UPON AN ASSUMED ELEVATION. LOCAL BENCHMARK IS THE RIM OF A SANITARY SEWER APPROXIMATELY 25' SOUTHWESTERLY FROM THE SOUTHEASTERLY CORNER OF TAX LOT 7, BLOCK 207 (THE SUBJECT PROPERTY).
   RIM ELEVATION = 100.25 (ASSUMED)
9. DO NOT SCALE DRAWINGS FOR LOCATIONS OF ADJACENT STRUCTURES AND SURROUNDING PHYSICAL CONDITIONS. THESE ITEMS MAY BE SCHEMATIC ONLY EXCEPT WHERE DIMENSIONS ARE SHOWN THERETO.
10. THIS IS A SUBDIVISION PLAN AND UNLESS SPECIFICALLY NOTED ELSEWHERE HEREON IS NOT A SURVEY.
11. THIS PLAN HAS BEEN PREPARED FOR PURPOSES OF MUNICIPAL AND AGENCY REVIEW AND APPROVAL. THIS PLAN SHALL NOT BE UTILIZED AS CONSTRUCTION DOCUMENTS OR DIGITAL STAKEOUT UNTIL ALL CONDITIONS OF APPROVAL HAVE BEEN SATISFIED AND THE DRAWINGS MARKED "ISSUED FOR CONSTRUCTION AND DIGITAL STAKEOUT".
12. EXISTING UTILITY INFORMATION SHOWN HEREON HAS BEEN COLLECTED FROM VARIOUS SOURCES AND IS NOT GUARANTEED AS TO ACCURACY AND COMPLETENESS. THE CONTRACTOR SHALL VERIFY ALL UTILITY INFORMATION TO HIS SATISFACTION PRIOR TO COMMENCEMENT OF ANY WORK. THE CONTRACTOR SHALL PERFORM TEST PITS WHERE EXISTING UTILITIES ARE TO BE CROSSED. TEST PIT INFORMATION SHALL BE GIVEN TO THE ENGINEER PRIOR TO CONSTRUCTION TO PERMIT ADJUSTMENTS AS MAY BE REQUIRED TO AVOID CONFLICTS.
13. CONTRACTOR SHALL NOTIFY THE UNDERSIGNED PROFESSIONAL IMMEDIATELY IF ANY FIELD CONDITIONS ENCOUNTERED DIFFER FROM THOSE SHOWN HEREON.
14. ALL MATERIAL, WORKMANSHIP AND CONSTRUCTION FOR SITE IMPROVEMENTS SHOWN HEREON SHALL BE IN ACCORDANCE WITH:
    - NJDOT "STANDARD SPECIFICATIONS FOR ROAD AND BRIDGE CONSTRUCTION", AS CURRENTLY AMENDED.
    - CURRENT PREVAILING MUNICIPAL AND/OR COUNTY SPECIFICATIONS, STANDARDS, AND REQUIREMENTS.
    - CURRENT PREVAILING UTILITY COMPANY/AUTHORITY SPECIFICATIONS, STANDARDS, AND REQUIREMENTS.
15. ALL EXISTING IMPERVIOUS SURFACES NOT TO REMAIN SHALL BE RESTORED WITH A MINIMUM OF 5" TOPSOIL SEED AND MULCH
16. THIS SITE IS LOCATED IN ZONE X (AREAS DETERMINED TO BE OUTSIDE THE 0.2% ANNUAL CHANCE FLOODPLAIN) AS PER THE FLOOD INSURANCE RATE MAP PANEL 34 OF 286 (MAP No. 34023C0034F DATED JULY 6, 2010).
17. ALL PROPOSED DOWNSPOUTS SHALL BE CONNECTED TO UNDERGROUND ROOF LEADER COLLECTION SYSTEM.
18. PER N.J.A.C. 7:14A-23.a, THE DEVELOPMENT PLAN PROPOSES A PROJECTED FLOW OF 300 G.P.D. TO THE EXISTING SANITARY SEWER MAIN WHICH TRAVERSES THE SUBJECT PROPERTY AT THE SOUTHEASTERLY PROPERTY CORNER. A TREATMENT WORKS APPROVAL IS NOT REQUIRED FOR THIS PROJECT.
19. THIS MINOR SUBDIVISION SHALL BE PERFECTED BY DEED.

LEGEND

– EXISTING SIDEWALK ELEVATION	– PROPOSED CONTOUR
– EXISTING GROUND ELEVATION	– PROPOSED SPOT ELEVATION
– EXISTING CENTERLINE ELEVATION	– EXISTING PAVEMENT ELEVATION
– EXISTING TOP OF CURB ELEVATION	– EXISTING GRAVEL ELEVATION
– EXISTING BOTTOM OF CURB ELEVATION	– EXISTING BUILDING ELEVATION
– EXISTING DEPRESSED CURB	– EXISTING CONCRETE ELEVATION
– EXISTING SANITARY MANHOLE	– EXISTING TOP OF GRATE ELEVATION
– EXISTING STORM MANHOLE	– EXISTING INVERT
– EXISTING UTILITY POLE	– EXISTING SPOT ELEVATION
– EXISTING WATER VALVE	– EXISTING EDGE OF PAVEMENT ELEVATION
– EXISTING TREE AND SIZE	– EXISTING CONTOUR
– EXISTING TREES TO BE REMOVED	

GRAPHIC SCALE
20 0 10 20 40 80
(IN FEET)
1 inch = 20 ft.

MINOR SUBDIVISION PLAN
MINOR SUBDIVISION
TAX LOT 7 BLOCK 207
BOROUGH OF SOUTH PLAINFIELD, MIDDLESEX COUNTY, NEW JERSEY

EKA ASSOCIATES, P.A.
Engineers • Surveyors • Planners
328 Park Avenue, Scotch Plains, N.J. 07076
908-322-2030

REVISIONS:
4-29-2020: REVISED PER BOARD PLANNER TO SHIFT NEW PROPERTY LINE

James R. Watson 4/29/2020
JAMES R. WATSON P.L.S., P.P.
PROFESSIONAL LAND SURVEYOR N.J. LICENSE NO. 30750 N.Y. LICENSE NO. 50196
PROFESSIONAL PLANNER N.J. LICENSE NO. 3363

Job No. 847319	Date 1/29/2020	Scale 1"=20'	Drawn SK	Map No. FILE	Sheet 2 of 6

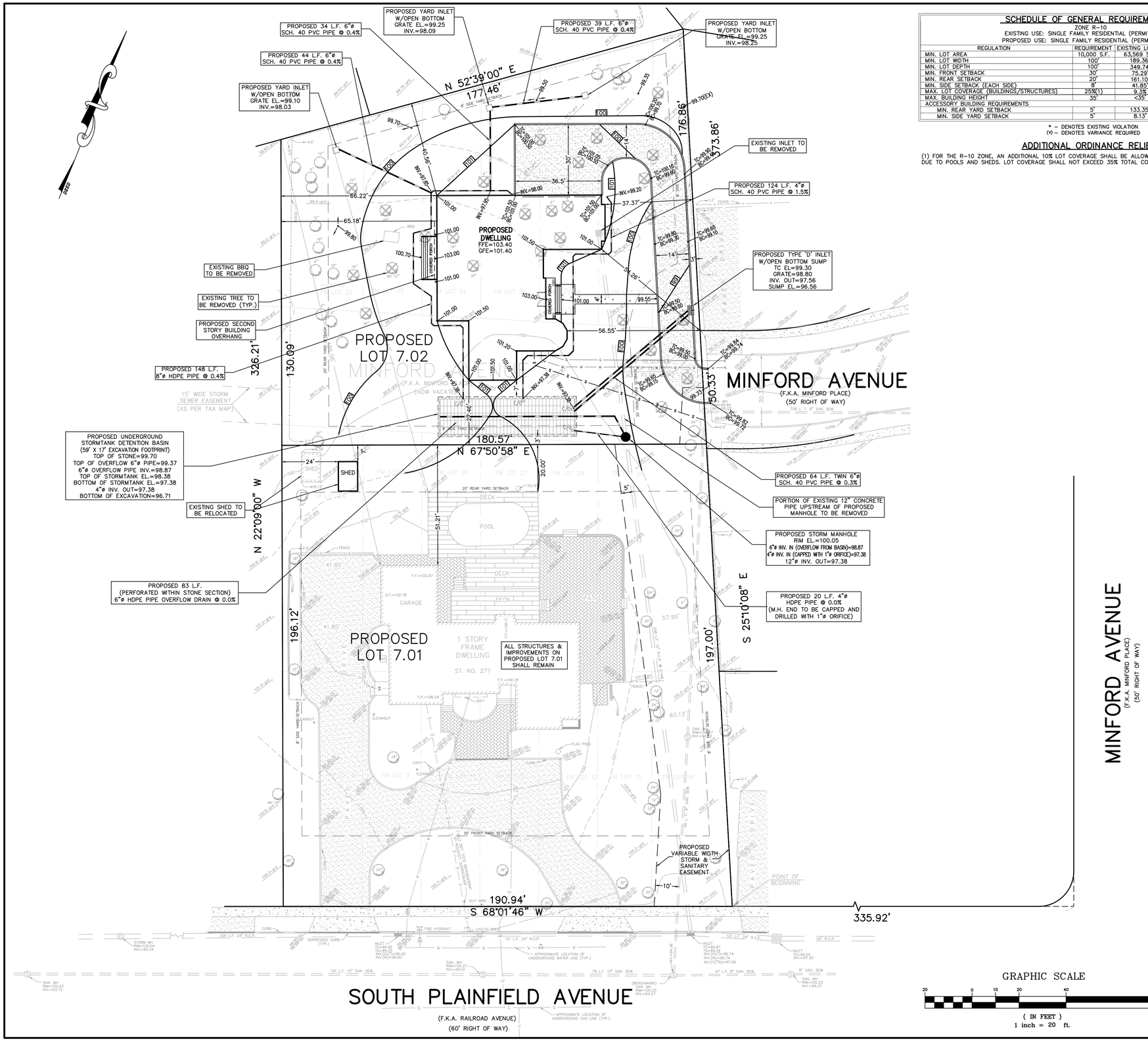

SCHEDULE OF GENERAL REQUIREMENTS

ZONE R–10
EXISTING USE: SINGLE FAMILY RESIDENTIAL (PERMITTED USE)
PROPOSED USE: SINGLE FAMILY RESIDENTIAL (PERMITTED USE)

REGULATION	REQUIREMENT	EXISTING LOT 7	PROPOSED LOT 7.01	PROPOSED LOT 7.02
MIN. LOT AREA	10,000 S.F.	63,569 S.F.	36,484 S.F.	27,085 S.F.
MIN. LOT WIDTH	100'	189.36'	189.36'	82.45'(V)
MIN. LOT DEPTH	100'	349.74'	196.40'	179.30'
MIN. FRONT SETBACK	30'	75.29'	75.29'	54.26'
MIN. REAR SETBACK	20'	161.10'	20'	65.18'
MIN. SIDE SETBACK (EACH SIDE)	8'	41.85'	41.85'	27.46'
MAX. LOT COVERAGE (BUILDINGS/STRUCTURES)	25%(1)	9.3%	16.2%	14.4%
MAX. BUILDING HEIGHT	35'	<35'	<35'	27.65'
ACCESSORY BUILDING REQUIREMENTS				
MIN. REAR YARD SETBACK	5'	133.35'	7'	N/A
MIN. SIDE YARD SETBACK	5'	8.13'	24'	N/A

* – DENOTES EXISTING VIOLATION
(V) – DENOTES VARIANCE REQUIRED

ADDITIONAL ORDINANCE RELIEF

(1) FOR THE R–10 ZONE, AN ADDITIONAL 10% LOT COVERAGE SHALL BE ALLOWED WHEN LOT COVERAGE IS EXCEEDED DUE TO POOLS AND SHEDS. LOT COVERAGE SHALL NOT EXCEED 35% TOTAL COVERAGE.

GENERAL NOTES:

1. THIS DRAWING REFERENCES A BOUNDARY & TOPOGRAPHIC SURVEY PREPARED BY:

   EKA ASSOCIATES, P.A.
   328 PARK AVENUE
   SCOTCH PLAINS, NJ 07076
   DATED 11–26–2019
   REVISED 1–6–2020

2. THIS PARCEL IS KNOWN AS LOT 7 IN BLOCK 207 AS SHOWN ON SHEET 17 OF THE TAX MAPS OF THE BOROUGH OF SOUTH PLAINFIELD.
3. AREA OF PARCEL = 63,569 S.F. OR 1.459 ACRES
4. THIS PARCEL IS LOCATED ENTIRELY IN THE R–10 ZONE AS SHOWN ON THE ZONING MAP OF THE BOROUGH OF SOUTH PLAINFIELD.
5. THIS PARCEL MAY BE SUBJECT TO UNDERGROUND UTILITIES AND/OR EASEMENTS WHICH ARE NOT SHOWN.
6. IF THIS DOCUMENT DOES NOT CONTAIN A RAISED IMPRESSION SEAL OF THE PROFESSIONAL, IT IS NOT AN AUTHORIZED ORIGINAL AND MAY HAVE BEEN ALTERED.
7. NO DETERMINATION WAS MADE AS TO THE PRESENCE AND/OR NONEXISTENCE OF TOXIC WASTES OR WETLANDS. ALSO NO DETERMINATION OF DEPTH TO GROUND WATER WAS MADE. THE CLIENT SHOULD PURSUE THESE MATTERS AS ITEMS SEPARATE AND APART FROM THIS PLAN.
8. DATUM INFORMATION: ELEVATIONS SHOWN HEREON ARE BASED UPON AN ASSUMED ELEVATION. LOCAL BENCHMARK IS THE RIM OF A SANITARY SEWER APPROXIMATELY 25' SOUTHWESTERLY FROM THE SOUTHEASTERLY CORNER OF TAX LOT 7, BLOCK 207 (THE SUBJECT PROPERTY).
   RIM ELEVATION = 100.25 (ASSUMED)
9. DO NOT SCALE DRAWINGS FOR LOCATIONS OF ADJACENT STRUCTURES AND SURROUNDING PHYSICAL CONDITIONS. THESE ITEMS MAY BE SCHEMATIC ONLY EXCEPT WHERE DIMENSIONS ARE SHOWN THERETO.
10. THIS IS A SUBDIVISION PLAN AND UNLESS SPECIFICALLY NOTED ELSEWHERE HEREON IS NOT A SURVEY.
11. THIS PLAN HAS BEEN PREPARED FOR PURPOSES OF MUNICIPAL AND AGENCY REVIEW AND APPROVAL. THIS PLAN SHALL NOT BE UTILIZED AS CONSTRUCTION DOCUMENTS OR DIGITAL STAKEOUT UNTIL ALL CONDITIONS OF APPROVAL HAVE BEEN SATISFIED AND THE DRAWINGS MARKED "ISSUED FOR CONSTRUCTION AND DIGITAL STAKEOUT".
12. EXISTING UTILITY INFORMATION SHOWN HEREON HAS BEEN COLLECTED FROM VARIOUS SOURCES AND IS NOT GUARANTEED AS TO ACCURACY AND COMPLETENESS. THE CONTRACTOR SHALL VERIFY ALL UTILITY INFORMATION TO HIS SATISFACTION PRIOR TO COMMENCEMENT OF ANY WORK. THE CONTRACTOR SHALL PERFORM TEST PITS WHERE EXISTING UTILITIES ARE TO BE CROSSED. TEST PIT INFORMATION SHALL BE GIVEN TO THE ENGINEER PRIOR TO CONSTRUCTION TO PERMIT ADJUSTMENTS AS MAY BE REQUIRED TO AVOID CONFLICTS.
13. CONTRACTOR SHALL NOTIFY THE UNDERSIGNED PROFESSIONAL IMMEDIATELY IF ANY FIELD CONDITIONS ENCOUNTERED DIFFER FROM THOSE SHOWN HEREON.
14. ALL MATERIAL, WORKMANSHIP AND CONSTRUCTION FOR SITE IMPROVEMENTS SHOWN HEREON SHALL BE IN ACCORDANCE WITH:
    - NJDOT "STANDARD SPECIFICATIONS FOR ROAD AND BRIDGE CONSTRUCTION", AS CURRENTLY AMENDED.
    - CURRENT PREVAILING MUNICIPAL AND/OR COUNTY SPECIFICATIONS, STANDARDS, AND REQUIREMENTS.
    - CURRENT PREVAILING UTILITY COMPANY/AUTHORITY SPECIFICATIONS, STANDARDS, AND REQUIREMENTS.
15. ALL EXISTING IMPERVIOUS SURFACES NOT TO REMAIN SHALL BE RESTORED WITH A MINIMUM OF 5" TOPSOIL SEED AND MULCH
16. THIS SITE IS LOCATED IN ZONE X (AREAS DETERMINED TO BE OUTSIDE THE 0.2% ANNUAL CHANCE FLOODPLAIN) AS PER THE FLOOD INSURANCE RATE MAP PANEL 34 OF 286 (MAP No. 34023C0034F DATED JULY 6, 2010).
17. ALL PROPOSED DOWNSPOUTS SHALL BE CONNECTED TO UNDERGROUND ROOF LEADER COLLECTION SYSTEM.
18. PER N.J.A.C. 7:14A–23.a, THE DEVELOPMENT PLAN PROPOSES A PROJECTED FLOW OF 300 G.P.D. TO THE EXISTING SANITARY SEWER MAIN WHICH TRAVERSES THE SUBJECT PROPERTY AT THE SOUTHEASTERLY PROPERTY CORNER. A TREATMENT WORKS APPROVAL IS NOT REQUIRED FOR THIS PROJECT.
19. THIS MINOR SUBDIVISION SHALL BE PERFECTED BY DEED.

LEGEND

– EXISTING SIDEWALK ELEVATION	160 – PROPOSED CONTOUR
– EXISTING GROUND ELEVATION	100.00 – PROPOSED SPOT ELEVATION
– EXISTING CENTERLINE ELEVATION	– EXISTING PAVEMENT ELEVATION
– EXISTING TOP OF CURB ELEVATION	– EXISTING GRAVEL ELEVATION
– EXISTING BOTTOM OF CURB ELEVATION	– EXISTING BUILDING ELEVATION
– EXISTING DEPRESSED CURB	– EXISTING CONCRETE ELEVATION
– EXISTING SANITARY MANHOLE	TG – EXISTING TOP OF GRATE ELEVATION
– EXISTING STORM MANHOLE	INV. – EXISTING INVERT
– EXISTING UTILITY POLE	– EXISTING SPOT ELEVATION
– EXISTING WATER VALVE	– EXISTING EDGE OF PAVEMENT ELEVATION
– EXISTING TREE AND SIZE	200 – EXISTING CONTOUR
– EXISTING TREES TO BE REMOVED	

GRAPHIC SCALE
20 0 10 20 40 80
(IN FEET)
1 inch = 20 ft.

GRADING, DRAINAGE & UTILITY PLAN
MINOR SUBDIVISION
TAX LOT 7 BLOCK 207
BOROUGH OF SOUTH PLAINFIELD, MIDDLESEX COUNTY, NEW JERSEY

EKA ASSOCIATES, P.A.
Engineers • Surveyors • Planners
328 Park Avenue, Scotch Plains, N.J. 07076
908–322–2030

REVISIONS:
4–29–2020: REVISED PER BOARD PLANNER TO SHIFT NEW PROPERTY LINE

THOMAS J. QUINN, P.E., C.M.E.
PROFESSIONAL ENGINEER
N.J. LICENSE NO. 24GE04107200

Job No. 847319	Date 1/29/2020	Scale 1"=20'	Drawn SK	Map No. FILE	Sheet 3 of 6

1. THIS PLAN IS TO BE USED FOR SOIL EROSION AND SEDIMENT CONTROL PURPOSES ONLY.
2. STREET SWEEPING TO BE IMPLEMENTED ON ADJACENT ROAD WAYS IF REQUIRED TO MAINTAIN SOIL AND DUST FREE CONDITION.

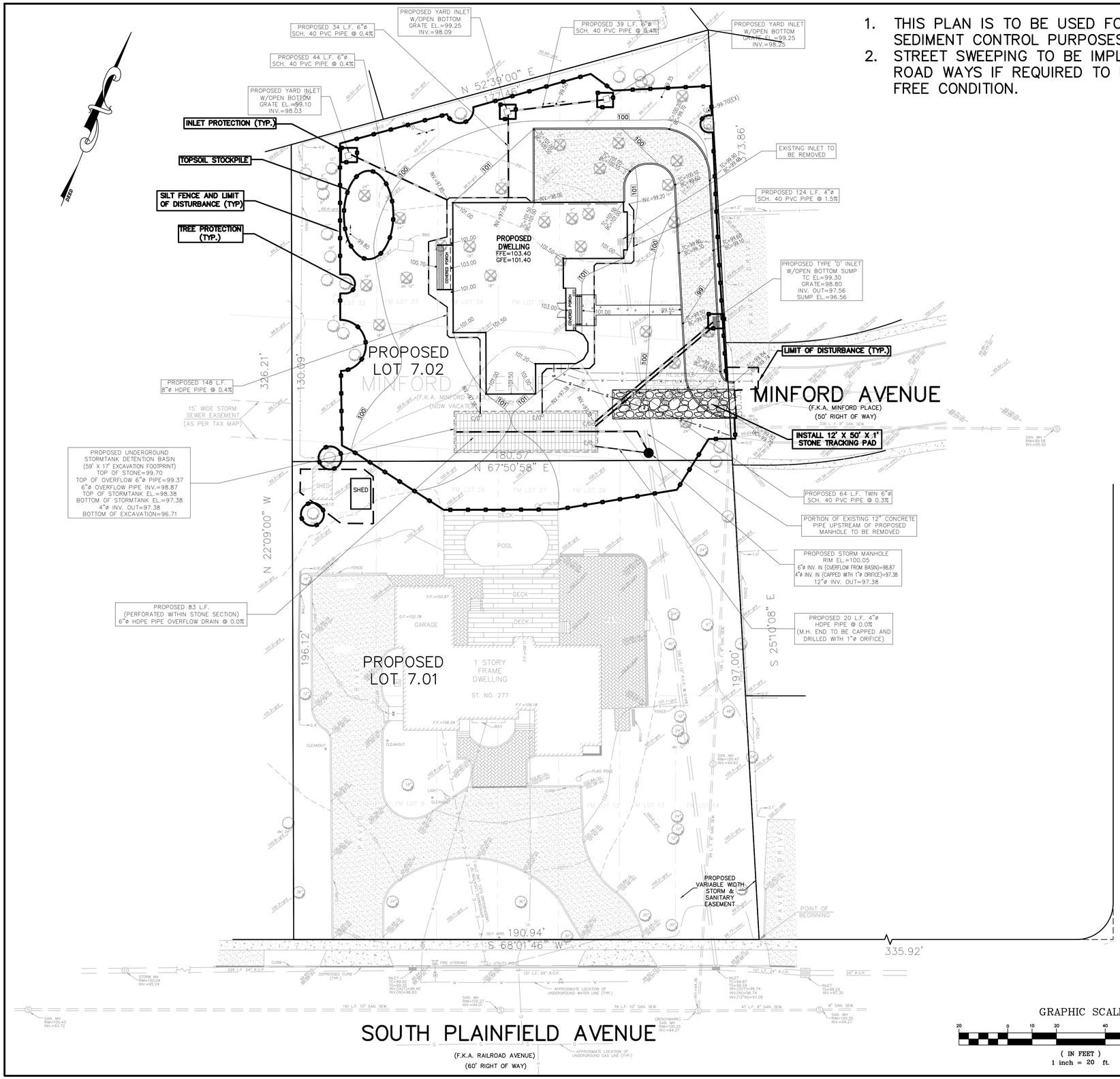

SOILS MAP
SCALE: 1"=60'
MAP SOURCED FROM USDA WEB SOIL SURVEY
THE SITE IS MADE UP OF:
PsuB (PSAMMENTS, WASTE SUBSTRATUM, 0 TO 8 PERCENT SLOPES)

TOTAL AREA OF DISTURBANCE AREA =25,472 SF OR 0.58 ACRES

PROJECT EXEMPTIONS:

1. THIS PROJECT IS EXEMPT FROM SOIL COMPACTION TESTING REQUIREMENTS BECAUSE IT IS WITHIN URBAN REDEVELOPMENT ZONE PA-1 AND IS PREVIOUSLY DEVELOPED.

SOILS EROSION AND SEDIMENT CONTROL LEGEND

- LIMIT OF DISTURBANCE
- SILT FENCE
- TREE PROTECTION

LEGEND

– EXISTING SIDEWALK ELEVATION	– PROPOSED CONTOUR
– EXISTING GROUND ELEVATION	– PROPOSED SPOT ELEVATION
– EXISTING CENTERLINE ELEVATION	– EXISTING PAVEMENT ELEVATION
– EXISTING TOP OF CURB ELEVATION	– EXISTING GRAVEL ELEVATION
– EXISTING BOTTOM OF CURB ELEVATION	– EXISTING BUILDING ELEVATION
– EXISTING DEPRESSED CURB	– EXISTING CONCRETE ELEVATION
– EXISTING SANITARY MANHOLE	– EXISTING TOP OF GRATE ELEVATION
– EXISTING STORM MANHOLE	– EXISTING INVERT
– EXISTING UTILITY POLE	– EXISTING SPOT ELEVATION
– EXISTING WATER VALVE	– EXISTING EDGE OF PAVEMENT ELEVATION
– EXISTING TREE AND SIZE	– EXISTING CONTOUR
– EXISTING TREES TO BE REMOVED	

GRAPHIC SCALE
20 0 10 20 40 80
(IN FEET)
1 inch = 20 ft.

SOIL EROSION & SEDIMENT CONTROL PLAN
MINOR SUBDIVISION
TAX LOT 7 BLOCK 207
BOROUGH OF SOUTH PLAINFIELD, MIDDLESEX COUNTY, NEW JERSEY

EKA ASSOCIATES, P.A.
Engineers • Surveyors • Planners
328 Park Avenue, Scotch Plains, N.J. 07076
908-322-2030

REVISIONS:
4-29-2020: REVISED PER BOARD PLANNER TO SHIFT NEW PROPERTY LINE

THOMAS J. QUINN, P.E., C.M.E.
PROFESSIONAL ENGINEER
N.J. LICENSE NO. 24GE04107200

Job No. 847319	Date 1/29/2020	Scale 1"=20'	Drawn SK	Map No. FILE	Sheet 4 of 6

SOIL EROSION AND SEDIMENT CONTROL NOTES

1. The Freehold Soil Conservation District shall be notified forty-eight (48) hours in advance of any soil disturbing activity.

2. All Soil Erosion and Sediment Control practices are to be installed prior to soil disturbance, or in their proper sequence, and maintained until permanent protection is established.

3. Any changes to the Certified Soil Erosion and Sediment Control Plans will require the submission of revised Soil Erosion and Sediment Control Plans to the District for re-certification. The revised plans must meet all current State Soil Erosion and Sediment Control Standards.

4. N.J.S.A 4:24-39 et. Seq. requires that no Certificates of Occupancy be issued before the District determines that a project or portion thereof is in full compliance with the Certified Plan and Standards for Soil Erosion and Sediment Control in New Jersey and a Report of Compliance has been issued. Upon written request from the applicant, the District may issue a Report of Compliance with conditions on a lot-by-lot or section-by-section basis, provided that the project or portion thereof is in satisfactory compliance with the sequence of development and temporary measures for soil erosion and sediment control have been implemented, including provisions for stabilization and site work.

5. Any disturbed areas that will be left exposed more than sixty (60) days, and not subject to construction traffic, will immediately receive a temporary seeding. If the season prevents the establishment of temporary cover, the disturbed areas will be mulched with straw, or equivalent material, at a rate of 2 to 2 ½ tons per acre, according to the Standard for Stabilization with Mulch Only.

6. Immediately following initial disturbance or rough grading, all critical areas subject to erosion (i.e. soil stockpiles, steep slopes and roadway embankments) will receive temporary seeding in combination with straw mulch or a suitable equivalent, and a mulch anchor, in accordance with State Standards.

7. A sub-base course will be applied immediately following rough grading and installation of improvements to stabilize streets, roads, driveways, and parking areas. In areas where no utilities are present, the sub-base shall be installed within fifteen (15) days of the preliminary grading.

8. The Standard for Stabilized Construction Access requires the installation of a pad of clean crushed stone at points where traffic will be accessing the construction site. After interior roadways are paved, individual lots require a stabilized construction access consisting of one inch to two inch (1"-2") stone for a minimum length of ten feet (10') equal to the lot entrance width. All other access points shall be blocked off.

9. All soil washed, dropped, spilled, or tracked outside the limit of disturbance or onto public right-of-ways will be removed immediately.

10. Permanent vegetation is to be seeded or sodded on all exposed areas within ten (10) days after final grading.

11. At the time that site preparation for permanent vegetative stabilization is going to be accomplished, any soil that will not provide a suitable environment to support adequate vegetative ground cover shall be removed or treated in such a way that it will permanently adjust the soil conditions and render it suitable for vegetative ground cover. If the removal or treatment of the soil will not provide suitable conditions, non-vegetative means of permanent ground stabilization will have to be employed.

12. In accordance with the Standard for Management of High Acid Producing Soils, any soil having a pH of 4 or less or containing iron sulfides shall be ultimately placed or buried with limestone applied at the rate of 10 tons/acre, (or 450 lbs/1,000 sq ft of surface area) and covered with a minimum of 12"of settled soil with a pH of 5 or more, or 24"where trees or shrubs are to be planted.

13. Conduit Outlet Protection must be installed at all required outfalls prior to the drainage system becoming operational.

14. Unfiltered dewatering is not permitted. Necessary precautions must be taken during all dewatering operations to minimize sediment transfer. Any dewatering methods used must be in accordance with the Standard for Dewatering.

15. Should the control of dust at the site be necessary, the site will be sprinkled until the surface is wet, temporary vegetative cover shall be established or mulch shall be applied as required by the Standard for Dust Control.

16. Stockpile and staging locations established in the field shall be placed within the limit of disturbance according to the certified plan. Staging and stockpiles not located within the limit of disturbance will require certification of a revised Soil Erosion and Sediment Control Plan. Certification of a new Soil Erosion and Sediment Control Plan may be required for these activities if an area greater than 5,000 square feet is disturbed.

17. All soil stockpiles are to be temporarily stabilized in accordance with Soil Erosion and Sediment Control note #6.

18. The property owner shall be responsible for any erosion or sedimentation that may occur below stormwater outfalls or offsite as a result of construction of the project.

PROPOSED SEQUENCE OF DEVELOPMENT

Installation of silt fence prior to any major soil disturbance. Maintenance until permanent protection is established.	Week 1
Construct stabilized construction access. Demolish existing buildings and clear and remove any existing vegetation in those areas where necessary. All remaining vegetation and trees to be properly protected and to remain in its natural state.	Week 1
Commence dwelling construction.	Week 2-24
Layout and location of all proposed utilities.	Week 25
Install stormwater management facilities and conveyance. Install and maintain inlet protection at all catch basins until site is permanently stabilized. Connect roof leader downspouts to detention basin.	Week 26-27
Construct driveway curbing	Week 28
Construct pavement base course.	Week 29
Fine grading of all lawn and landscape areas.	Week 30
Complete all landscaping and vegetative cover.	Week 30
Installation of all pavement surface course	Week 31
Removal of all temporary sediment and erosion control devices.	upon completion

STANDARD FOR TEMPORARY VEGETATIVE COVER FOR SOIL STABILIZATION

DEFINITION

Establishment of temporary vegetative cover on soils exposed for periods of two to 6 months which are not being graded, not under active construction or not scheduled for permanent seeding within 60 days.

PURPOSE

To temporarily stabilize the soil and reduce damage from wind and water erosion until permanent stabilization is accomplished.

WATER QUALITY ENHANCEMENT

Provides temporary protection against the impacts of wind and rain, slows the over land movement of stormwater runoff, increases infiltration and retains soil and nutrients on site, protecting streams or other stormwater conveyances.

WHERE APPLICABLE

On exposed soils that have the potential for causing off-site environmental damage.

METHODS AND MATERIALS

SITE PREPARATION

A. Grade as needed and feasible to permit the use of conventional equipment for seedbed preparation, seeding, mulch application, and mulch anchoring. All grading should be done in accordance with Standards for Land Grading, pg. 19-1.

B. Install needed erosion control practices or facilities such as diversions, grade stabilization structures, channel stabilization measures, sediment basins, and waterways. See Standards 11 through 42.

C. Immediately prior to seeding, the surface should be scarified 6" to 12" where there has been soil compaction. This practice is permissible only where there is no danger to underground utilities (cables, irrigation systems, etc.).

SEEDBED PREPARATION

A. Apply ground limestone and fertilizer according to soil test recommendations such as offered by Rutgers Co-operative Extension. Soil sample mailers are available from the local Rutgers Cooperative Extension offices. Fertilizer shall be applied at the rate of 500 pounds per acre or 11 pounds per 1,000 square feet of 10-20-10 or equivalent with 50% water insoluble nitrogen unless a soil test indicates otherwise. Apply limestone at the rate of 2 tons/acre unless soil testing indicates otherwise. Calcium carbonate is the equivalent and standard for measuring the ability of liming materials to neutralize soil acidity and supply calcium and magnesium to grasses and legumes.

B. Work lime and fertilizer into the soil as nearly as practical to a depth of 4 inches with a disc, springtooth harrow, or other suitable equipment. The final harrowing or disking operation should be on the general contour. Continue tillage until a reasonable uniform seedbed is prepared.

C. Inspect seedbed just before seeding. If traffic has left the soil compacted, the area must be retilled in accordance with the above.

D. Soils high in sulfides or having a pH of 4 or less refer to Standard for Management of High Acid Producing Soils, pg. 1-1.

SEEDING

A. Select seed from recommendations in Table 7-2.

TABLE 7-2
TEMPORARY VEGETATIVE STABILIZATION GRASSES, SEEDING RATES, DATES AND DEPTH.

SEED SELECTIONS	SEEDING RATE[1] (pounds) Per Acre	SEEDING RATE[1] (pounds) Per 1000 Sq. Ft.	OPTIMUM SEEDING DATE[2] Based on Plant Hardiness Zone[3] ZONE 5b,6s	ZONE 6b	ZONE 7a,b	OPTIMUM SEEDING DEPTH[4] (inches)
COLD SEASON GRASSES						
1. Perennial ryegrass	100	1.0	3/15-6/1 8/1-9/15	3/1-5/15 8/15-10/1	2/15-5/1 8/15-10/15	0.5
2. Spring oats	86	2.0	3/15-6/1 8/1-9/15	3/1-5/15 8/15-10/1	2/15-5/1 8/15-10/15	1.0
3. Winter Barley	96	2.2	8/1-9/15	8/15-10/1	8/15-10/15	1.0
4. Annual Ryegrass	100	1.0	3/15-6/1 8/1-9/15	3/1-6/1 8/1-9/15	2/15-5/1 8/15-10/15	0.5
5. Winter Cereal Rye	112	2.8	8/1-11/1	8/1-11/15	8/1-12/15	1.0
WARM SEASON GRASSES						
6. Pearl millet	20	0.5	6/1-8/1	5/15-8/15	5/1-9/1	1.0
7. Millet (German or Hungarian)	30	0.7	6/1-8/1	5/15-8/15	5/1-9/1	1.0

1 Seeding rate for warm season grass, selections 5 - 7 shall be adjusted to reflect the amount of Pure Line Seed (PLS) as determined by a germination test result. No adjustment is required for cool season grasses.
2 May be planted throughout summer if soil moisture is adequate or seeded area can be irrigated.
3 Plant Hardiness Zone (see figure 7-1, pg. 7-4.)
4 Twice the depth for sandy soils

B. Conventional Seeding. Apply seed uniformly by hand, cyclone (centrifugal) seeder, drop seeder, drill or cultipacker seeder. Except for drilled, hydroseeded or cultipacked seedings, seed shall be incorporated into the soil, to a depth of 1/4 to 1/2 inch, by raking or dragging. Depth of seed placement may be 1/4 inch deeper on coarse textured soil.

C. Hydroseeding is a broadcast seeding method usually involving a truck or trailer mounted tank, with an agitation system and hydraulic pump for mixing seed, water and fertilizer and spraying the mix onto the prepared seedbed. Mulch shall not be included in the tank with seed. Short fibered mulch may be applied with a hydroseeder following seeding. (also see Section IV Mulching) Hydroseeding is not a preferred seeding method because seed and fertilizer are applied to the surface and not incorporated into the soil. Poor seed to soil contact occurs reducing seed germination and growth. Hydroseeding may be used for areas too steep for conventional equipment to traverse or too obstructed with rocks, stumps, etc.

D. After seeding, firming the soil with a corrugated roller will assure good seed-to-soil contact, restore capillarity, and improve seedling emergence. This is the preferred method. When performed on the contour, sheet erosion will be minimized and water conservation on site will be maximized.

MULCHING

Mulching is required on all seeding. Mulch will insure against erosion before grass is established and will promote faster and earlier establishment. The existence of vegetation sufficient to control soil erosion shall be deemed compliance with this mulching requirement.

A. Straw or Hay. Unrotted small grain straw, hay free of seeds, applied at the rate of 1-1/2 to 2 tons per acre (70 to 90 pounds per 1,000 square feet), except that where a crimper is used instead of a liquid mulch-binder (tackifying or adhesive agent), the rate of application is 3 tons per acre. Mulch chopper-blowers must not grind the mulch. Hay mulch is not recommended for establishing fine turf or lawns due to the presence of weed seed. Application. Spread mulch uniformly by hand or mechanically so that approximately 95% of the soil surface will be covered. For uniform distribution of hand-spread mulch, divide area into approximately 1,000 square feet sections and distribute 70 to 90 pounds within each section.Anchoring shall be accomplished immediately after placement to minimize loss by wind or water. This may be done by one of the following methods, depending upon the size of the area, steepness of slopes, and costs.

1. Peg and Twine. Drive 8 to 10 inch wooden pegs to within 2 to 3 inches of the soil surface every 4 feet in all directions. Stakes may be driven before or after applying mulch. Secure mulch to soil surface by stretching twine between pegs in a cris-cross and a square pattern. Secure twine around each peg with two or more round turns.

2. Mulch Nettings. Staple paper, jute, cotton, or plastic nettings to the soil surface. Use a degradable netting in areas to be mowed. 3. Crimper (mulch anchoring tool). A tractor-drawn implement, somewhat like a disc harrow, especially designed to push or cut some of the broadcast long fiber mulch 3 to 4 inches into the soil so as to anchor it and leave part standing upright. This technique is limited to areas traversable by a tractor, which must operate on the contour of slopes. Straw mulch rate must be 3 tons per acre. No tackifying or adhesive agent is required.

4. Liquid Mulch-Binders. -May be used to anchor hay or straw mulch.

a. Applications should be heavier at edges where wind may catch the mulch, in valleys, and at crests of banks. The remainder of the area should be uniform in appearance.

b. Use one of the following:

(1) Organic and Vegetable Based Binders -Naturally occurring, powder based, hydrophilic materials when mixed with water formulates a gel and when applied to mulch under satisfactory curing conditions will form membraned networks of insoluble polymers. The vegetable gel shall be physiologically harmless and not result in a phytotoxic effect or impede growth of turfgrass. Use at rates and weather conditions as recommended by the manufacturer to anchor mulch materials. Many new products are available, some of which may need further evaluation for use in this state.

(2) Synthetic Binders -High polymer synthetic emulsion, miscible with water when diluted and following application to mulch, drying and curing shall no longer be soluble or dispersible in water. It shall be applied at rates recommended by the manufacturer and remain tacky until germination of grass.

Note: All names give above are registered trade names. This does not constitute a commendation of these products to the exclusion of other products.

B. Wood-fiber or paper-fiber mulch. Shall be made from wood, plant fibers or paper containing no growth or germination inhibiting materials, used at the rate of 1,500 ponds per acre (or as recommended by the project manufacturer) and may be applied by a hydroseeder. This mulch shall not be mixed in the tank with seed. Use is limited to flatter slopes and during optimum seeding periods in spring and fall.

C. Pelletized mulch. Compressed and extruded paper and/or wood fiber product, which may contain co-polymers, tackifiers, fertilizers and coloring agents. The dry pellets, when applied to a seeded area and watered, forma mulch mat. Pelletized mulch shall be applies in accordance with the manufacturers recommendations. Mulch may be applied by hand or mechanical spreader at the rate of 60-75 lbs./1,000 square feet and activated with 0.2 to 0.4 inches of water. This material has bee found to be beneficial for use on small lawn or renovation areas, seeded areas where weed-seed free mulch is desired or on sites where straw mulch and tackifier agent are not practical or desirable.

Applying the full 0.2 to 0.4 inches of water after spreading pelletized mulch on the seed bed is extremely important for sufficient activation and expansion of the mulch to provide soil coverage.

STANDARD FOR PERMANENT VEGETATIVE COVER FOR SOIL STABILIZATION

DEFINITION

Establishment of permanent vegetative cover on exposed soils where perennial vegetation is needed for long term protection.

PURPOSE

To permanently stabilize the soil, assuring conservation of soil and water, and to enhance the environment.

WATER QUALITY ENHANCEMENT

Slows the over land movement of stormwater runoff, increases infiltration and retains soil and nutrients on site, protecting streams or other stormwater conveyances.

WHERE APPLICABLE

On exposed soils that have the potential for causing off-site environmental damage.

SITE PREPARATION

A. Grade as needed and feasible to permit the use of conventional equipment for seedbed preparation, seeding, mulch application, and mulch anchoring. All grading should be done in accordance with Standard for Land Grading.

B. Immediately prior to seeding and topsoil application, the subsoil shall be evaluated for compaction in accordance with the Standard for Land Grading .

C. Topsoil should be handled only when it is dry enough to work without damaging the soil structure. A uniform application to a depth of 5 inches (unsettled) is required on all sites. Topsoil shall be amended with organic matter, as needed, in accordance with the Standard for Topsoiling.

D. Install needed erosion control practices or facilities such as diversions, grade-stabilization structures, channel stabilization measures, sediment basins, and waterways.

SEEDBED PREPARATION

A. Uniformly apply ground limestone and fertilizer to topsoil which has been spread and firmed, according to soil test recommendations such as offered by Rutgers Co-operative Extension Soil sample mailers are available from the local Rutgers Cooperative Extension offices (http://njaes.rutgers.edu/county/). Fertilizer shall be applied at the rate of 500 pounds per acre or 11 pounds per 1,000 square feet of 10-10-10 or equivalent with 50% water insoluble nitrogen unless a soil test indicates otherwise and incorporated into the surface 4 inches. If fertilizer is not incorporated, apply one-half the rate described above during seedbed preparation and repeat another one-half rate application of the same fertilizer within 3 to 5 weeks after seeding.

B. Work lime and fertilizer into the topsoil as nearly as practical to a depth of 4 inches witha disc, spring-tooth harrow, or other suitable equipment. The final harrowing or disking operation should be on the general contour. Continue tillage until a reasonable uniform seedbed is prepared.

C. High acid producing soil. Soils having a pH of 4 or less or containing iron sulfide shall be covered with a minimum of 12 inches of soil having a pH of 5 or more before initiating seedbed reparation. See Standard for Management of High Acid-Producing Soils for specific requirements.

SEEDING

A. Select a mixture from Table 4-3 or use a mixture recommended by Rutgers Cooperative Extension or Natural Resources Conservation Service which is approved by the Soil Conservation District. Seed germination shall have been tested within 12 months of the planting date. No seed shall be accepted with a germination test date more than 12 months old unless retested.

1. Seeding rates specified are required when a report of compliance is requested prior to actual establishment of permanent vegetation. Up to 50% reduction in rates may be used when permanent vegetation is established prior to a report of compliance inspection. These rates apply to all methods of seeding. Establishing permanent vegetation means 80% vegetative coverage with the specified seed mixture for the seeded area and mowed once.

2. Warm-season mixtures are grasses and legumes which maximize growth at high temperatures, generally 85o F and above. See Table 4-3 mixtures 1 to 7. Planting rates for warm-season grasses shall be the amount of Pure Live Seed (PLS) as determined by germination testing results.

3. Cool-season mixtures are grasses and legumes which maximize growth at temperatures below 85oF. Many grasses become active at 65oF. See Table 4-3, mixtures 8-20. Adjustment of planting rates to compensate for the amount of PLS is not required for cool season grasses.

B. Conventional Seeding is performed by applying seed uniformly by hand, cyclone (centrifugal) seeder, drop seeder, drill or cultipacker seeder. Except for drilled, hydroseeded or cultipacked seedings, seed shall be incorporated into the soil within 24 hours of seedbed preparation to a depth of 1/4 to 1/2 inch, by raking or dragging. Depth of seed placement may be 1/4 inch deeper on coarse-textured soil.

C. After seeding, firming the soil with a corrugated roller will assure good seed-to-soil contact, restore capillarity, and improve seedling emergence. This is the preferred method. When performed on the contour, sheet erosion will be minimized and water conservation on site will be maximized.

D. Hydroseeding is a broadcast seeding method usually involving a truck, or trailer-mounted tank, with an agitation system and hydraulic pump for mixing seed, water and fertilizer and spraying the mix onto the prepared seedbed. Mulch shall not be included in the tank with seed. Shortfibered mulch may be applied with a hydroseeder following seeding. (also see Section 4-Mulching below). Hydroseeding is not a preferred seeding method because seed and fertilizer are applied to the surface and not incorporated into the soil. When poor seed to soil contact occurs, there is a reduced seed germination and growth.

MULCHING

Mulching is required on all seeding. Mulch will protect against erosion before grass is established and will promote faster and earlier establishment. The existence of vegetation sufficient to control soil erosion shall be deemed compliance with this mulching requirement.

A. Straw or Hay. Unrotted small grain straw, hay free of seeds, to be applied at the rate of 1-1/2 to 2 tons per acre (70 to 90 pounds per 1,000 square feet), except that where a crimper is used instead of a liquid mulch-binder (tackifying or adhesive agent), the rate of application is 3 tons per acre. Mulch chopper-blowers must not grind the mulch. Hay mulch is not recommended for establishing fine turf or lawns due to the presence of weed seed.
Application - Spread mulch uniformly by hand or mechanically so that at least 85% of the soil surface is covered. For uniform distribution of hand-spread mulch, divide area into approximately 1,000 square feet sections and distribute 70 to 90 pounds within each section.
Anchoring shall be accomplished immediately after placement to minimize loss by wind or water. This may be done by one of the following methods, depending upon the size of the area, steepness of slopes, and costs.

1. Peg and Twine. Drive 8 to 10 inch wooden pegs to within 2 to 3 inches of the soil surface every 4 feet in all directions. Stakes may be driven before or after applying mulch. Secure mulch to soil surface by stretching twine between pegs in a criss-cross and a square pattern. Secure twine around each peg with two or more round turns.

2. Mulch Nettings - Staple paper, jute, cotton, or plastic nettings to the soil surface. Use a degradable netting in areas to be mowed.

3. Crimper (mulch anchoring coulter tool) - A tractor-drawn implement, somewhat like a disc harrow, especially designed to push or cut some of the broadcast long fiber mulch 3 to 4 inches into the soil so as to anchor it and leave part standing upright. This technique is limited to areas traversable by a tractor, which must operate on the contour of slopes. Straw mulch rate must be 3 tons per acre. No tackifying or adhesive agent is required.

4. Liquid Mulch-Binders - May be used to anchor salt hay, hay or straw mulch.

a. Applications should be heavier at edges where wind may catch the mulch, in valleys, and at crests of banks. The remainder of the area should be uniform in appearance.

b. Use one of the following:
(1) Organic and Vegetable Based Binders - Naturally occurring, powder-based, hydrophilic materials when mixed with water formulates a gel and when applied to mulch under satisfactory curing conditions will form membraned networks of insoluble polymers. The vegetable gel shall be physiologically harmless and not result in a phytotoxic effect or impede growth of turf grass. Use at rates and weather conditions as recommended by the manufacturer to anchor mulch materials. Many new products are available, some of which may need further evaluation for use in this state.

(2) Synthetic Binders - High polymer synthetic emulsion, miscible with water when diluted and, following application of mulch, drying and curing, shall no longer be soluble or dispersible in water. Binder shall be applied at rates recommended by the manufacturer and remain tacky until germination of grass.

Note: All names given above are registered trade names. This does not constitute a recommendation of these products to the exclusion of other products.

B. Wood-fiber or paper-fiber mulch - shall be made from wood, plant fibers or paper containing no growth or germination inhibiting materials, used at the rate of 1,500 pounds per acre (or as recommended by the product manufacturer) and may be applied by a hydroseeder. Mulch shall not be mixed in the tank with seed. Use is limited to flatter slopes and during optimum seeding periods in spring and fall.

C. Pelletized mulch - compressed and extruded paper and/or wood fiber product, which may contain co-polymers, tackifiers, fertilizers, and coloring agents. The dry pellets, when applied to a seeded area and watered, form a mulch mat. Pelletized mulch shall be applied in accordance with the manufacturer's recommendations. Mulch may be applied by hand or mechanical spreader at the rate of 60-75 lbs/1,000 square feet and activated with 0.2 to 0.4 inches of water. This material has been found to be beneficial for use on small lawn or renovation areas, seeded areas where weedseed free mulch is desired, or on sites where straw mulch and tackifier agent are not practical or desirable. Applying the full 0.2 to 0.4 inches of water after spreading pelletized mulch on the seed bed is extremely important for sufficient activation and expansion of the mulch to provide soil coverage.

IRRIGATION (where feasible)

If soil moisture is deficient supply new seeding with adequate water (a minimum of 1/4 inch applied up to twice a day until vegetation is well established). This is especially true when seedings are made in abnormally dry or hot weather or on droughty sites.

TOPDRESSING

Since soil organic matter content and slow release nitrogen fertilizer (water insoluble) are prescribed in Section 2A - Seedbed Preparation in this Standard, no follow-up of topdressing is mandatory. An exception may be made where gross nitrogen deficiency exists in the soil to the extent that turf failure may develop. In that instance, topdress with 10-10-10 or equivalent at 300 pounds per acre or 7 pounds per 1,000 square feet every 3 to 5 weeks until the gross nitrogen deficiency in the turf is ameliorated.

ESTABLISHING PERMANENT VEGETATIVE STABILIZATION

The quality of permanent vegetation rests with the contractor. The timing of seeding, preparing the seedbed, applying nutrients, mulch and other management are essential. The seed application rates in Table 4-3 are required when a Report of Compliance is requested prior to actual establishment of permanent vegetation. Up to 50% reduction in application rates may be used when permanent vegetation is established prior to requesting a Report of Compliance from the district. These rates apply to all methods of seeding. Establishing permanent vegetation means 80% vegetative cover (of the seeded species) and mowed once. Note this designation of mowed once does not guarantee the permanency of the turf should other maintenance factors be neglected or otherwise mismanaged.

TABLE 4-2
PERMANENT STABILIZATION MIXTURES FOR VARIOUS USES

Application	PLANTING MIXTURES BY SOIL DRAINAGE CLASS/[1] (see Table 4-3) Excessively Drained	Well to Moderately Well Drained	Somewhat Poorly to Poorly Drained
Residential/commercial lots	10, 12, 15	6, 10, 12, 13, 14, 15	16
Pond and channel banks, dikes, berms, and dams	2, 5, 6, 10	5, 6, 7, 8, 9, 15	2, 8, 16, 17
Drainage ditches, swales, detention basins	2, 9, 11	2, 7, 9, 11, 12, 17	2, 9, 16, 17
Filter Strips	12	11, 12	11, 12
Grasses waterway, spillways	2, 3, 9, 10, 12	6, 7, 9, 10, 11, 12	2, 9, 11, 12
Recreation areas, athletic fields	5, 12, 15, 18	12, 13, 14, 15, 18	16
Special Problem Sites: Steep slope and banks, roadsides, borrow areas	2, 3, 4, 6	2, 3, 5, 7, 8, 9, 10, 15, 18	2, 9, 10, 11, 12
Sand and gravel pits, Sanitary landfills	1, 2, 3, 4, 6, 20	1, 2, 3, 4, 5, 6, 8, 15, 20	2, 8
Dredged material, spoilbanks, borrow areas	2, 3, 6, 20	2, 3, 6, 11	2, 8
Streambanks & shorelines[2]	2, 8, 20, 21a	2, 8, 19b, 20, 21a, 21b	2,8,19a, 21a,b,c,d
Utility rights-of-way	3, 7, 180	3, 7	8, 9, 17

1. Refer to Soil Surveys for drainage class descriptions.
2. Refer to Soil Bioengineering Standard for additional seed mixtures.
3. Spillways only
4. See Appendix E for description of turf grasses and cultivars

TABLE 4-3
PERMANENT VEGETATIVE MIXTURES, PLANTING RATES AND PLANTING DATES[1]

PLANTING DATES: O = Optimal Planting period; A = Acceptable Planting period. PLANT HARDINESS ZONES (see Figure 4-1).

SEED MIXTURE[2]	PLANTING RATE/[3] lbs./acre	PLANTING RATE/[3] lbs./1000 sq. ft.	Zone 5b, 6a 3/15-5/31	Zone 5b, 6a 6/1-7/31	Zone 5b, 6a 8/1-10/31	Zone 6b 3/1-4/30	Zone 6b 5/1-8/14	Zone 6b 8/15-10/15	Zone 7a, 7b 2/1-4/30	Zone 7a, 7b 5/1-8/14	Zone 7a, 7b 8/15-10/30	MAINTENANCE LEVEL/[4]	REMARKS
WARM SEASON SEED MIXTURES													
1A. For pinelands national reserve seed mixtures see table 4-4 page 4-17			O			O			O				
1. Switchgrass and/or Coastal panicgrass plus or Flatpea	15 15 20 20	.35 .35 .45 .45	O			O			O			C-D	
2. Deertongue or Switchgrass Redtop	15 20 1 10	.35 .45 .10 .23	O			O			O			C-D	Use Deertongue if pH < 4.0. Switchgrass is superior wildlife plant. Use for waterways. Redtop provides quick cover.
3. Switchgrass Deertongue Little Bluestem Sheep fescue plus Partridge pea	15 10 20 20 10	.35 .25 .45 .45 .25	O			O			O			C-D	Pinelands mixture.
4. Switchgrass Big Bluestem Little Bluestem Sand lovegrass Coastal panicgrass	10 5 5 4 10	.25 .10 .10 .10 .25	O			O			O			C-D	Native warm - season mixture.
5. Bermudagrass Zoysiagrass(seed) Zoysiagrass (sprigs)	15 30	.35 .70	O			O			O			A-D	Bermudagrass has superior salt tolerance. Zoysia has greater wear tolerance.
COOL SEASON SEED MIXTURES	130	3	A	A[5]	O	A	A[5]	O	A	A[5]	O		General low-maintenance mixture
6. Fine Fescue (Blend) Hard Fescue Chewings fescue Strong Creeping Red Fescue Kentucky Bluegrass Perennial ryegrass plus White clover	45 20 5	.1 .5 .10										B-D	White clover can be removed when establish lawns
7. Strong Creeping red fescue Kentucky bluegrass Perennial ryegrass or Redtop plus White clover	130 50 20 10 5	3 1 .5 .25 .10	A	A[5]	O	A	A[5]	O	A	A[5]	O	B-D	Suitable waterway mix. Canada bluegrass more drought tolerant. Used Redtop for increased drought tolerance.
8. Tall fescue (turf-type) or Strong Creeping red fescue or Perennial ryegrass Flatpea	30 30 30 25	.7 .7 .7 .60	O	A[6]		O	A[6]		O	A[6]	O	B-D	Tall fescue best selected for droughty conditions. Use Creeping red fescue in heavy shade. Use Flatpea to suppress woody vegetation.
9. Deertongue Redtop Wild rye(Elymus) Switchgrass	20 2 15 25	.45 .05 .35 .60	O			O			O			C-D	Native wet mix.
10. Tall fescue (turf-type) Perennial ryegrass or White clover	265 20 10 5	6 5 .25 .10	O	A[5]	A[5]	O	A[5]	A[5]	O	A[5]	A[5]	C-D	White clover can be excluded on lawn sites
11. Kentucky bluegrass Turf-type Tall fescue	15 45 22	0.33 1 5	A	A[5]	O	A	A[5]	O	A	A[5]	O	C-D	Filter strip use for nutrient uptake.
12. Turf-type Tall fescue (Blend of 3 cultivars)	**350**	**8**	**A**	**A[5]**	**O**	**A**	**A[5]**	**O**	**A**	**A[5]**	**O**	**C-D**	**Use in a managed filter strip for nutrient uptake.**
13. Hard Fescue Chewing fescue and/ or Strong Creeping Red Fescue Perennial ryegrass Ky. bluegrass (blend)	175 45 45	4 1 1	A	A[5]	O	A	A[5]	O	A	A[5]	O	A-C	General lawn/recreation.
14. Tall Fescue Ky. bluegrass (blend) Prn. ryegrass (blend)	265 20 20	6 .50 .50	A	A[5]	O	A	A[5]	O	A	A[5]	O	A-B	Athletic field/Mix 3 cultivars of Kentucky Bluegrass.
15. Hard Fescue Creeping fescue Strong Creeping Red Fescue Perennial ryegrass	130 45 45 10	3 1 1 .25	A	A[5]	O	A	A[5]	O	A	A[5]	O	C-D	Low maintenance fine fescue lawn mix.
16. Rough bluegrass Strong Creeping red fescue	90 130	2.0 3	A	A[5]	O	A	A[5]	O	A	A[5]	O	C-D	Moist shade.
17. Creeping Bentgrass Creeping red fescue Alkali Saltgrass	45 45 45	1 1 1	A	A[5]	O	A	A[5]	O	A	A[5]	O	B-D	Use bentgrass under wetter conditions. Saltgrass will only persistent under daline conditions
18. Hard or Sheeps fescue N.E. wildflower mixture	25 12	0.60 0.35	O	A	O	O	A	O	O	A	O	C-D	regional wildflower mix Hydroseeding not recommended
19. a. Smooth cordgrass b. Saltmeadow cordgrass	veg veg					O	Before 7/1		O	Before 7/1		C-D	Planted in the intertidal zone. Planted above mean high tide.
20. American beachgrass Coastal panicgrass	veg 20	.45				Before 4/1			O			D	Coastal oanicgrass may be interseeded between rows of beachgrass
21. a. Purpleosier willow b. Dwarf willow c. Redosier dogwood d. Silky dogwood	veg veg veg veg		Before 5/10			Before 5/10			Before 5/1			D	Also refer to chapters 16 and 18 of USDA NRCS engineering field handbook

"USE THIS SEED MIXTURE"

Table 4-3 Footnotes:
1. See Appendix B for descriptions of turf grass mixtures and cultivars. The actual amount of warm-season grass mixture used in Table 3 (seed mix 1-7) shall be adjusted to reflect the amount of PLS as determined by germination testing results. No adjustment is required for cool-season grasses (seed mixtures 8-20).

2. Seeding mixtures and/or rates not listed above may be used if recommended by the local Soil Conservation District, Natural Resources Conservation Service; recommendations of Rutgers Cooperative Extension may be used if approved by the Soil Conservation District. Legumes (white clover, flatpea, lespedeza) should be mixed with proper innoculant prior to planting.

3. Seeding rates specified are required when a report of compliance is requested prior to actual establishment of permanent vegetation. Up to 50% reduction in rates may be used when permanent vegetation is established prior to a report of compliance inspection. These rates apply to all methods of seeding. Establishing permanent vegetation means 80% vegetative coverage of the seeded area and mowed once. Grass seed mixture checked by the State Seed Analyst, New Jersey Department of Agriculture, Trenton, New Jersey, will assure the purchaser that the mixture obtained is the mixture ordered, pursuant to the N.J.State Seed Law, N.J.S.A. 4:8-17.13 et. seq.

O = optimal planting period A = acceptable planting period

4. Maintenance Level:
A: Intensive mowing, (2-4 days), fertilization, lime, pest control and irrigation (Examples - high-maintenance lawns, commercial and recreation areas, public facilities).
B: Frequent mowing, (4-7 days), occasional fertilization, lime and weed control (Examples - home lawns, commercial sites, school sites).
C: Periodic mowing (7-14 days), occasional fertilization and lime (Examples - home lawns, parks).
D: Infrequent or no mowing, fertilization and lime the first year of establishment (Examples - roadsides, recreation areas, public open spaces)

5. Summer seedings should only be conducted when the site is irrigated. Mixes including white clover require that at least six weeks of growing season remain after seeding to ensure establishment before freezing conditions.

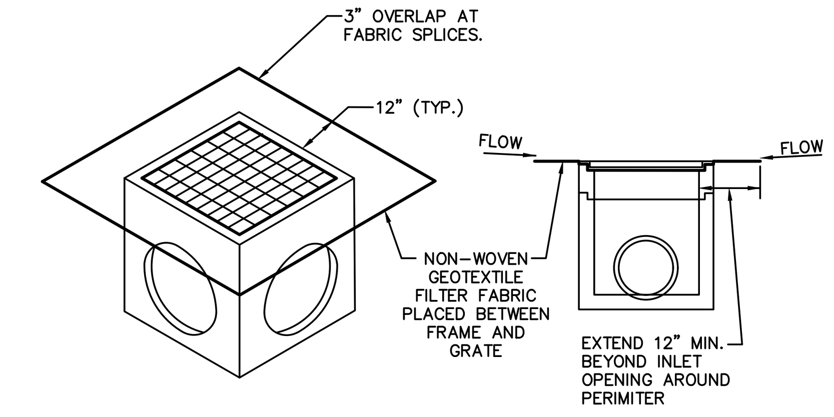

1. DAILY INSPECTION SHALL BE MADE BY THE CONTRACTOR AND SILT ACCUMULATION MUST BE REMOVED WHEN DEPTH REACHES 2".

2. CONTRACTOR SHALL MONITOR THE PERFORMANCE OF INLET PROTECTION DURING EACH RAINFALL EVENT AND IMMEDIATELY CLEAN THE INLET PROTECTION IF EXCESSIVE PONDING OCCURS.

3. INLET PROTECTIONS SHALL BE REMOVED AS SOON AS THE SOURCE OF SEDIMENT IS STABILIZED.

SILT PROTECTION FOR YARD INLETS ONLY
NTS

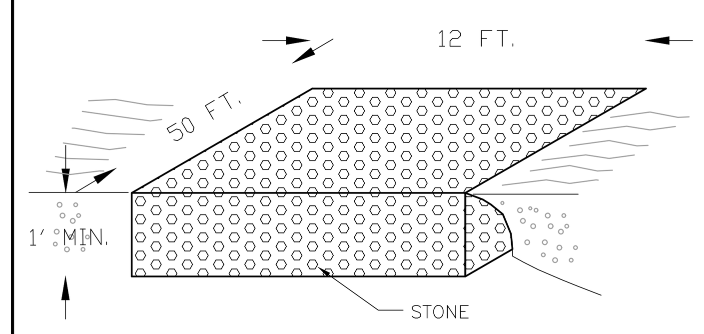

NOTES:
1. STONE SIZE - USE ASTM C-33, SIZE No. 2 (2 ½ TO 1 ½ IN.) OR 3 (2 TO 1 IN.). USE CLEAN CRUSHED ANGULAR STONE.
2. THICKNESS - NOT LESS THAN 6 INCHES OR AS SPECIFIED IN THE DETAIL ABOVE.
3. WIDTH - NOT LESS THAN FULL WIDTH OF POINTS OF INGRESS AND EGRESS
4. THE ENTRANCE SHALL BE MAINTAINED IN A CONDITION WHICH WILL PREVENT TRACKING OR FLOWING OF SEDIMENT ONTO ROADWAYS. THIS MAY REQUIRE PERIODIC TOP DRESSING WITH ADDITIONAL STONE OR ADDITIONAL LENGTH AS CONDITIONS DEMAND AND REPAIR AND/OR CLEANOUT OF ANY MEASURES USED TO TRAP SEDIMENT. ALL SEDIMENT SPILLED, DROPPED, WASHED, OR TRACKED ONTO ROADWAYS (PUBLIC OR PRIVATE) OR OTHER IMPERVIOUS SURFACES MUST BE REMOVED IMMEDIATELY.
5. WHERE ACCUMULATION OF DUST/SEDIMENT IS INADEQUATELY CLEANED OR REMOVED BY CONVENTIONAL METHODS, A POWER BROOM OR STREET SWEEPER WILL BE REQUIRED TO CLEAN PAVED OR IMPERVIOUS SURFACES. ALL OTHER ACCESS POINTS WHICH ARE NOT STABILIZED SHALL BE BLOCKED OFF.

PERCENT SLOPE OF ROADWAY	LENGTH OF STONE REQUIRED: COARSE GRAINED SOILS	FINE GRAINED SOILS
0 TO 2%	50 FT	100 FT
2 TO 5%	100 FT	200 FT
>5%	ENTIRE SURFACE STABILIZED WITH FABC BASE COURSE	

STONE ENTRANCE PAD
NTS

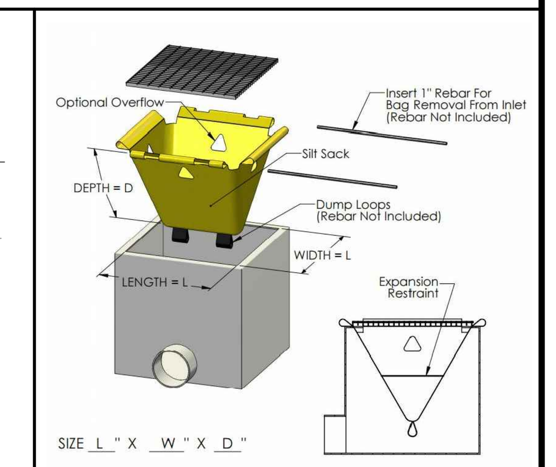

CURB INLET PROTECTION
NOT TO SCALE

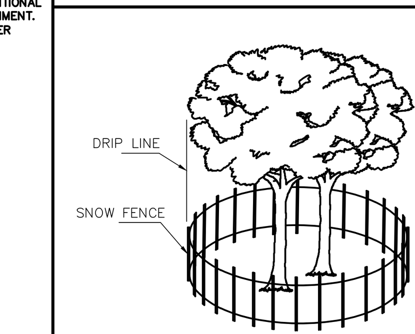

TREE PROTECTION DETAIL
NOT TO SCALE

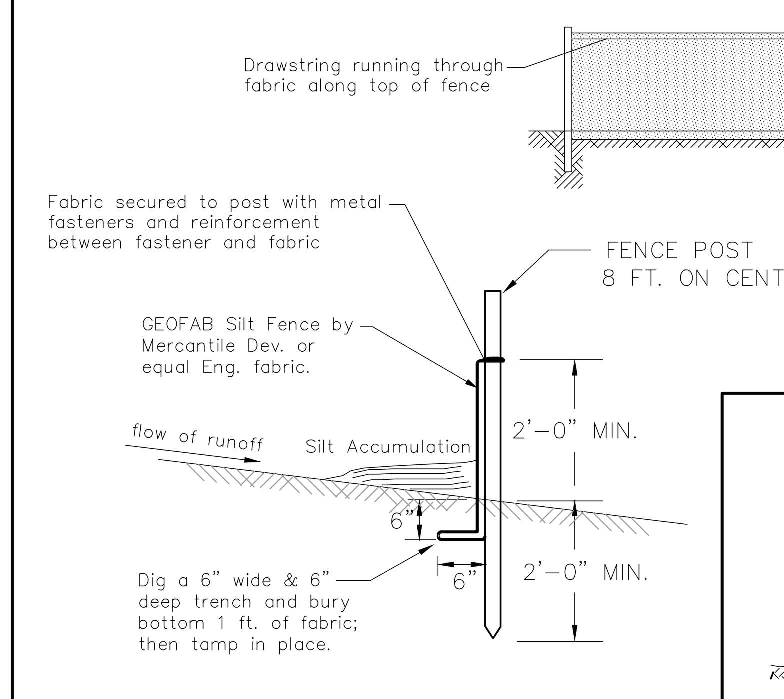

SILT FENCE DETAIL
NTS

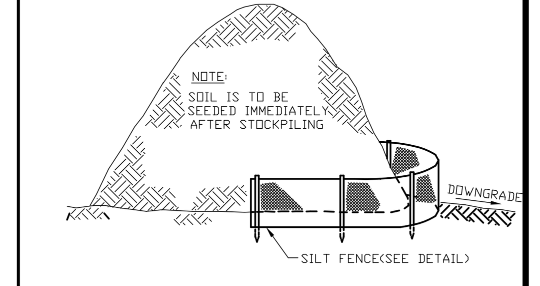

TOPSOIL STOCKPILING DETAIL
NTS

SOIL EROSION & SEDIMENT CONTROL NOTES & DETAILS
MINOR SUBDIVISION
TAX LOT 7 BLOCK 207
BOROUGH OF SOUTH PLAINFIELD, MIDDLESEX COUNTY, NEW JERSEY

EKA ASSOCIATES, P.A.
Engineers • Surveyors • Planners
328 Park Avenue, Scotch Plains, N.J. 07076
908-322-2030

REVISIONS:
4-29-2020: REVISED PER BOARD PLANNER TO SHIFT NEW PROPERTY LINE

THOMAS J. QUINN, P.E., C.M.E.
PROFESSIONAL ENGINEER
N.J. LICENSE NO. 24GE04107200

Job No.	Date	Scale	Drawn	Map No.	Sheet
847319	1/29/2020	NTS	SK	FILE	5 of 6

StormTank Module Volume Calculations

Inputs

Project Name:	847319 - 277 South Plainfield Avenue, South Plainfield		
Engineer:	EKA ASSOCIATES, P.A.	Date:	12/20/2020
Units:	US	Shape:	Square/Rectangle
Liner:	No	Location:	N/A
Stacking:	Single	Height:	12
Stone Storage:	All	Porosity:	40%

Dimensions

Module		
Length:	57	ft
Width:	15	ft
Excavation		
Length:	59	ft
Width:	17	ft
Stone		
Leveling Bed:	0.67	ft
Top Backfill:	0.5	ft
Compacted Fill:	0.5	ft

Results

Capacity:

Stone Storage Volume:	528.60	ft^3
Module Storage Volume:	801.04	ft^3
Total Storage Volume:	1,329.64	ft^3

Quantities:

Required Excavation:	99.19	y^3
Required Stone Volume:	48.94	y^3
Estimated Geotextile:	517.26	y^2
Estimated Liner:	0.00	ft^2

(Estimations include 10% for scrap and overlap)

Storage Capacity Ratio

* Stone Storage Volume: * Module Storage Volume:

Basin Detail

Component Quantities:

	Bottom Layer	Top Layer	Total
Height	12.0	N/A	12.0
# of Modules	190	N/A	190
# of Platens	380	N/A	380
# of Side Panels	96	N/A	96
# of Columns	1,520	N/A	1,520
# of Stacking Pins	0	N/A	0

Cross-Section:

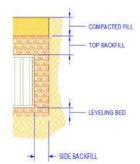

MINIMUM VOLUME REQUIREMENT: 1,313 C.F. (BASED ON HYDRAFLOW HYDROGRAPH CALCULATIONS)

VOLUME CALCULATIONS

NOT TO SCALE

STEP 1:

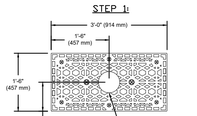

STEP 2:

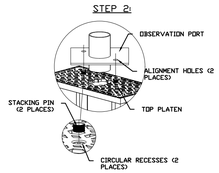

TABLE A: OBSERVATION PORT DIMENSION		
PORT SIZE	OPEN SIZE	RISER PIPE SIA
6" (152 mm)	7" (178 mm)	6" (152 mm)
8" (203 mm)	9" (229 mm)	8" (203 mm)
10" (254 mm)	11" (279 mm)	10" (254 mm)

LAYOUT & CUT OPENING INTO THE CENTER OF THE TOP PLATEN FOR UNENTVOIDD OBSERVATION PORT.

ALIGN PORT PLATE WITH TOP PANEL: INSERT TWO STORMTANK MODULE STACKING PINS INTO THE CIRCULAR RECESSES IN THE TOP PLATEN OF THE STORMTANK MODULE. INSERT THE SHORT SIDE OF THE PORT PIPE STUB INTO THE PLATEN ALIGNING THE PORT PLATE ALIGNMENT HOLES WITH THE STACKING PINS.

STEP 3:

INSTALL OBSERVATION PORT

STEP 4:

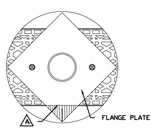

⚠ MARK & CUT FLANGE PLATE FLUSH WITH MODULE SIDE "WHEN MODULE IS ON THE PERIMETER OF THE SYSTEM"

STEP 5:

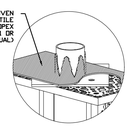

INSTALL GEOTEXTILE: WRAP SPECIFIED GEOTEXTILE FABRIC AROUND ENTIRE INSTALLATION OF STORMTANK MODULES. CUT "X" PATTERN INTO GEOTEXTILE FABRIC AT OBSERVATION PORT AND PEEL EDGES OUT.

STEP 6:

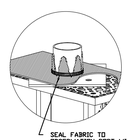

SEAL FABRIC TO OBSERVATION PORT WITH SS BANDING, WATER RESISTANT TAPE OR NYLON ZIP-TIE

OBSERVATION PORT/CLEANOUT DETAILS

NOT TO SCALE

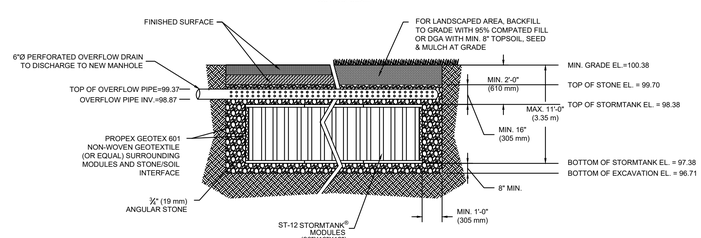

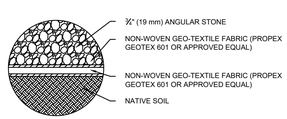

TYPICAL STORM TANK MODULE DETAIL

NOT TO SCALE

GENERAL NOTES:
1. STORMTANKS SHALL BE INSTALLED IN ACCORDANCE WITH MANUFACTURER RECOMMENDATIONS.
2. EXPLORATORY SOIL TEST PITS SHALL BE PERFORMED TO VERIFY THE ABSENCE OF GROUNDWATER WITHIN 2 FEET OF THE BOTTOM OF THE BASIN EXCAVATION.
3. PROVIDE CLEANOUTS AT ALL PIPE INFLOW & OUTFLOW LOCATIONS AS SHOWN ON THE PLANS.

UNDERGROUND DETENTION BASIN DETAILS

NOT TO SCALE

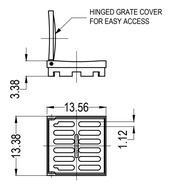

STANDARD

APPROX. DRAIN AREA = 60.62 SQ. IN.
APPROX. WEIGHT WITH FRAME = 40.68 LBS.

NYLOPLAST 12" GRATES

STANDARD GRATE HAS H-25 HEAVY DUTY RATING SOLID COVER HAS H-25 HEAVY DUTY RATING PEDESTRIAN GRATE HAS H-10 MEDIUM DUTY RATING QUALITY: MATERIALS SHALL CONFORM TO ASTM A536 GRADE 70-50-05 & A48-CLASS 30B MATERIAL: DUCTILE IRON GRATE W/CAST IRON FRAME PAINT: CASTINGS ARE FURNISHED WITH A BLACK PAINT LOCKING DEVICE AVAILABLE UPON REQUEST PRICE INCLUDES FRAME & GRATE/COVER

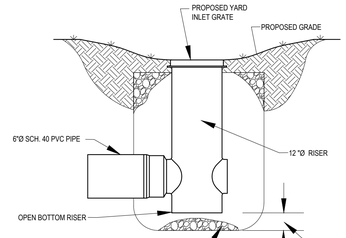

THE BACKFILL MATERIAL SHALL BE CRUSHED STONE OR OTHER GRANULAR MATERIAL MEETING THE REQUIREMENTS OF CLASS I, CLASS II, OR CLASS III MATERIAL AS DEFINED IN ASTM D2321. BEDDING & BACKFILL FOR SURFACE DRAINAGE INLETS SHALL BE PLACED AND COMPACTED UNIFORMLY IN ACCORDANCE WITH ASTM D2321.

PROVIDE OPEN-GRADED STONE BOTTOM TO A MINIMUM DEPTH OF 24" MEASURED FROM THE INLET GRATE

12" DRAIN BASIN

YARD INLET DETAIL

NOT TO SCALE

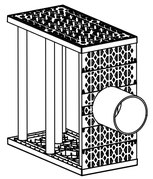

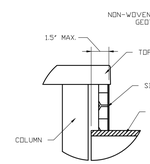

DETAIL

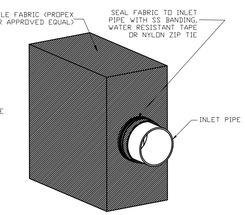

NOTE: TO BE INSTALLED IN ACCORDANCE WITH MANUFACTURER SPECIFICATIONS & INSTALLATION PROCEDURES.

PIPE CONNECTION DETAIL

NOT TO SCALE

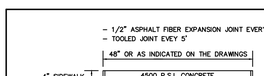

CONCRETE WALK DETAIL

NOT TO SCALE

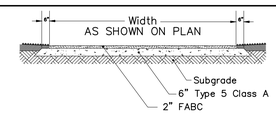

RESIDENTIAL DRIVEWAY PAVEMENT DETAIL
(SINGLE & TWO FAMILY)

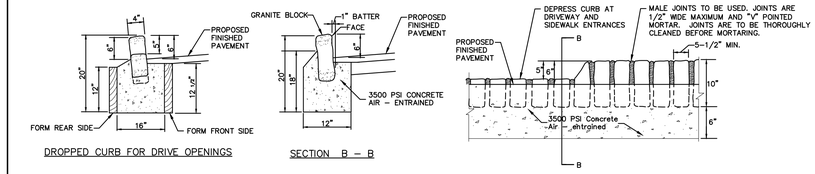

DROPPED CURB FOR DRIVE OPENINGS

SECTION B – B

GRANITE BLOCK CURBING DETAIL

NOT TO SCALE

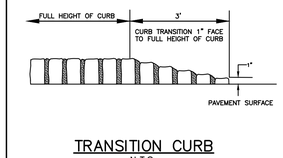

TRANSITION CURB

N.T.S.

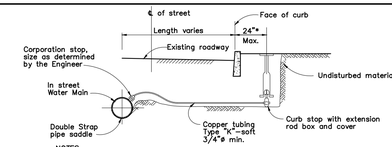

NOTES:
1) The corporation stop,copper tubing and curb stop shall be all of the same size and shall be determined by the Engineer in the field.
2) The location of the curb boxes along roads without curbs, shall be determined in the field by the Engineer.
3) Meter location to be determined by water purveyor.

SERVICE CONNECTION SCHEMATIC

N.T.S.

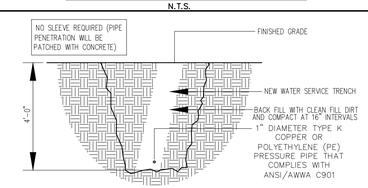

WATER SERVICE TRENCH DETAIL

N.T.S.

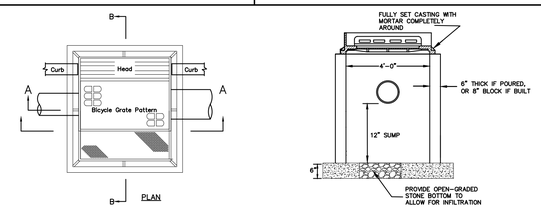

SECTION A–A

NOTE: Frames to be Campbell Foundry Co. Pattern No 2541, Grate to be No. 2017 (Bicycle Safe) or approved equal and Curb Piece to be Type "N"-Eco

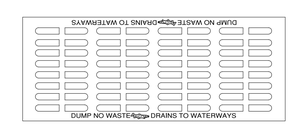

PLAN VIEW OF INLET GRATE

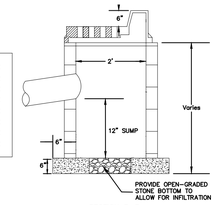

SECTION B–B

TYPICAL OPEN-BOTTOM TYPE 'D' INLET DETAIL

NOT TO SCALE

DOWN-SPOUT OVERFLOW DETAIL

NOT TO SCALE

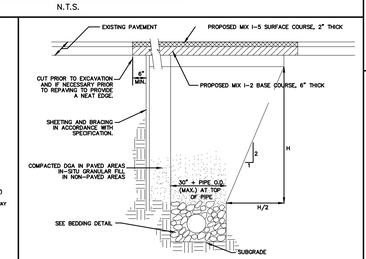

CONSTRUCTION NOTES:

1. AT MANHOLES BITUMINOUS STABILIZED BASE IS TO BE PLACED 6" BEYOND THE TRENCH LIMIT OR 6" BEYOND DAMAGED PAVEMENT BASE COURSE WHICHEVER IS GREATER.

2. SERVICE CONNECTION TRENCHES ARE TO BE REPAIRED AS ABOVE.

3. ANY SUPERFICIAL SURFACE DAMAGE CAUSED BY THE CONTRACTOR OUTSIDE THE LIMIT SHOWN, SHALL BE REPAIRED. WHEN THE EXISTING PAVEMENT IS DAMAGED BEYOND THE LIMITS SHOWN THE CONTRACTOR SHALL REMOVE THE DAMAGED PAVEMENT AND REPLACE WITH 6" STABILIZED BASE AS SHOWN ABOVE.

4. D.G.A. TO BE COMPACTED IN 8" MAXIMUM LIFTS

TRENCH AND PAVEMENT REPAIR

N.T.S.

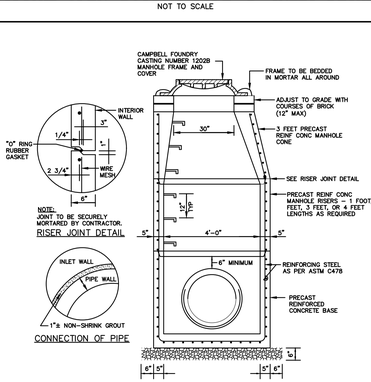

PRECAST DRAINAGE MANHOLE SECTION
4'-0" DIAMETER

NOTE:
PRECAST REINFORCED CONCRETE MANHOLE SECTIONS SHALL CONFORM TO AASHTO M199, ASTM C478.

PRECAST CONCRETE DRAINAGE MANHOLE & OUTLET CONTROL STRUCTURE

NOT TO SCALE

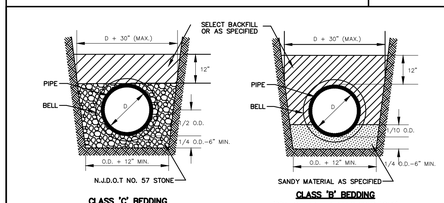

CLASS 'C' BEDDING
(CLAY, WET OR UNSUITABLE BEDDING CONDITIONS OR PVC SEWER PIPE)

CLASS 'B' BEDDING
(DRY, SUITABLE BEDDING CONDITIONS)

SANITARY SEWER PIPE BEDDING DETAIL

N.T.S.

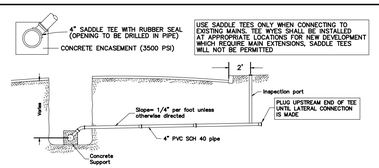

SANITARY SEWER
TYPICAL HOUSE CONNECTION DETAIL

NOT TO SCALE

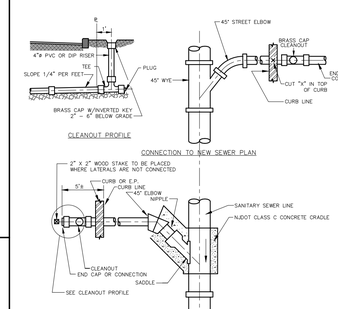

CONSTRUCTION NOTES: CONNECTION TO EXISTING SEWER

1. DETAIL SHOWS CONSTRUCTION OF A "BRANCH CONNECTION" AND OF TWO DIFFERENT TYPES OF "LATERAL HOUSE CONNECTION". TYPE CONNECTION IS AT CONTRACTOR'S OPTION.

2. SIZE OF LATERAL AS SHOWN ON THE PLANS OR AS REQUIRED BY THE ENGINEERING DEPARTMENT

BRANCH AND LATERAL HOUSE CONNECTIONS

NOT TO SCALE

CONSTRUCTION DETAILS
MINOR SUBDIVISION
TAX LOT 7 BLOCK 207
BOROUGH OF SOUTH PLAINFIELD, MIDDLESEX COUNTY, NEW JERSEY

EKA ASSOCIATES, P.A.
Engineers • Surveyors • Planners
328 Park Avenue, Scotch Plains, N.J. 07076
908-322-2030

REVISIONS:
4-29-2020: REVISED PER BOARD PLANNER TO SHIFT NEW PROPERTY LINE

THOMAS J. QUINN, P.E., C.M.E.
PROFESSIONAL ENGINEER
N.J. LICENSE NO. 24GE04107200

Job No. 847319	Date 1/29/2020	Scale NTS	Drawn SK	Map No: FILE	Sheet 6 of 6

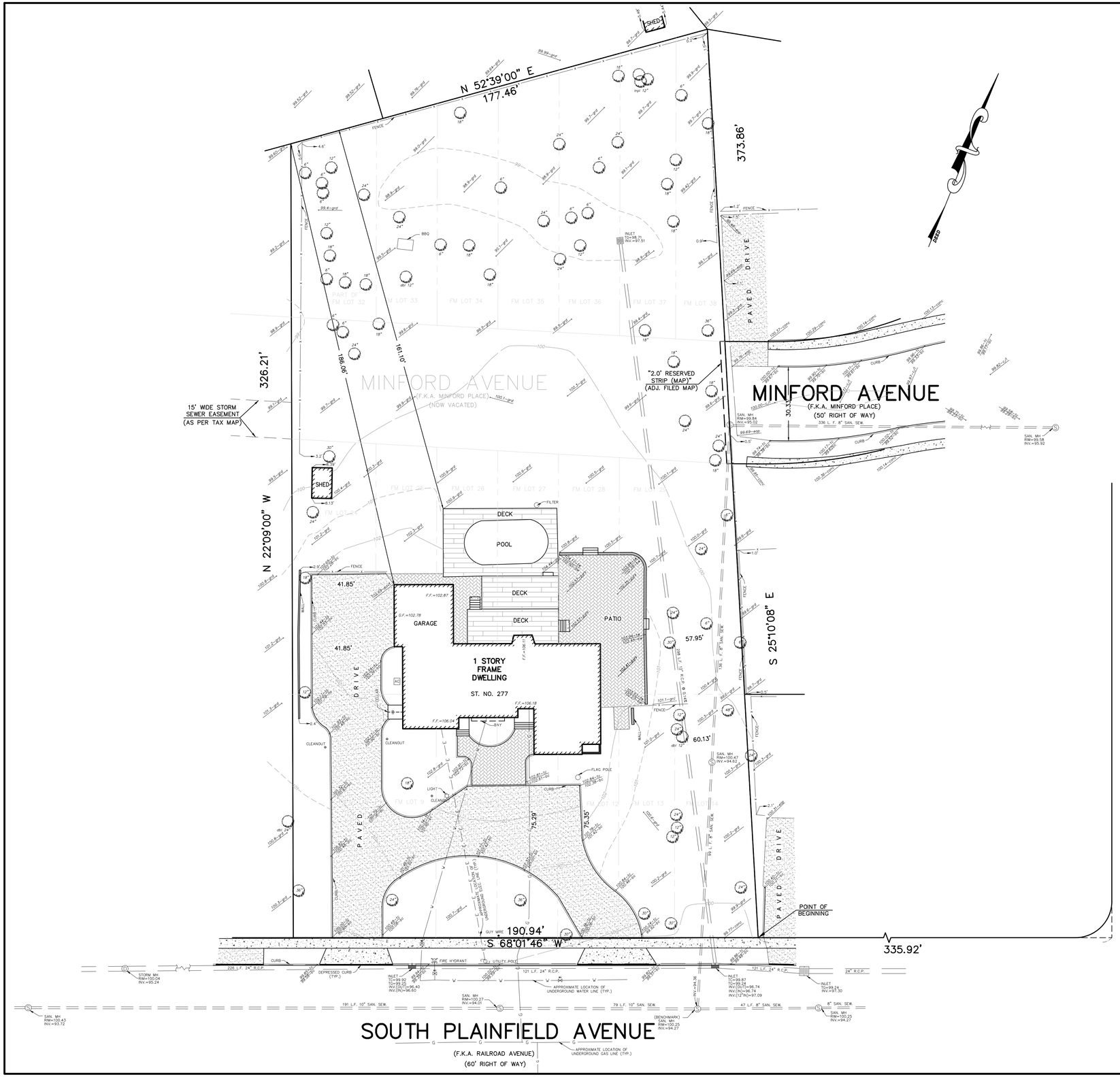

NOTES

1. THIS SURVEY IS BASED UPON THE FOLLOWING DATA AND/OR RECEPTIONS:

		YES	NO
A.	DEED OF RECORD	X	
B.	FILED MAP	X	
C.	FIELD SURVEY	X	
D.	TITLE SEARCH		X
E.	TAX MAP	X	
F.	OTHER (SEE REFERENCES)		X

2. THIS SURVEY REPRESENTS CONDITIONS VISIBLE ON OR ABOVE THE SURFACE OF THE GROUND AT THE TIME OF THE SURVEY. THE UNDERSIGNED PROFESSIONAL IS NOT RESPONSIBLE FOR THE PRESENCE OF UNDERGROUND UTILITIES OR STRUCTURES IF SAME ARE NOT VISIBLE OR OTHERWISE DISCLOSED BY ANY OF THE ABOVE DATA.

3. THIS SURVEY AND PLAN IS MADE FOR AND CERTIFIED TO THE PARTIES NAMED HEREON FOR THE PURPOSE(S) STATED. NO OTHER PURPOSE IS INTENDED NOR IMPLIED. THE UNDERSIGNED SURVEYOR IS NEITHER RESPONSIBLE NOR LIABLE FOR THE USE OF THIS SURVEY FOR ANY OTHER PURPOSE INCLUDING, BUT NOT LIMITED TO, USE OF SURVEY FOR SURVEY AFFIDAVIT, RESALE OF PROPERTY, OR TO ANY OTHER PERSON NOT LISTED IN THE CERTIFICATION, EITHER DIRECTLY OR INDIRECTLY.

4. IF THIS DOCUMENT DOES NOT CONTAIN A RAISED IMPRESSION SEAL OF THE PROFESSIONAL, IT IS NOT AN AUTHORIZED ORIGINAL AND MAY HAVE BEEN ALTERED.

5. PARCEL CONTAINS 63,569 S.F.OR 1.459 ACRES ±.

6. A WRITTEN WAIVER AND DIRECTION NOT TO SET CORNER MARKERS HAS BEEN OBTAINED FROM THE ULTIMATE USER PURSUANT TO P.L.2003,c.14(C45:8-36.3) AND N.J.A.C. 13:40-5.1(d).

7. ELEVATIONS SHOWN HEREON ARE BASED UPON AN ASSUMED ELEVATION. LOCAL BENCHMARK IS THE RIM OF A SANITARY SEWER MANHOLE LOCATED IN THE CENTER OF SOUTH PLAINFIELD AVENUE LOCATED APPROXIMATELY 25' SOUTHWESTERLY FROM THE SOUTHEASTERLY CORNER OF TAX LOT 7, BLOCK 207 (THE SUBJECT PROPERTY).
RIM ELEVATION = 100.25 (ASSUMED)

RECORD DEED
DEED BOOK 4358 PAGE 8

TAX MAP
SHEET No. 17

REFERENCE
N/A

FILED MAP DATA
ADJACENT MAP ENTITLED, "MAP OF BARVEL HOMES," FILED 1/30/1958 AS MAO No. 2189, FILE 945

LEGEND

~sw	– EXISTING SIDEWALK ELEVATION	100	– PROPOSED CONTOUR
~grd	– EXISTING GROUND ELEVATION	100.0	– PROPOSED SPOT ELEVATION
~cl	– EXISTING CENTERLINE ELEVATION	~pav't	– EXISTING PAVEMENT ELEVATION
~tc	– EXISTING TOP OF CURB ELEVATION	~gvl	– EXISTING GRAVEL ELEVATION
~bc	– EXISTING BOTTOM OF CURB ELEVATION	~bldg	– EXISTING BUILDING ELEVATION
	– EXISTING DEPRESSED CURB	~fnc	– EXISTING FENCE ELEVATION
S	– EXISTING SANITARY MANHOLE	~conc	– EXISTING CONCRETE ELEVATION
FH	– EXISTING FIRE HYDRANT	TG	– EXISTING TOP OF GRATE ELEVATION
D	– EXISTING STORM MANHOLE	INV.	– EXISTING INVERT
	– EXISTING GUY WIRE	148.46	– EXISTING SPOT ELEVATION
	– EXISTING UTILITY POLE	~ep	– EXISTING EDGE OF PAVEMENT ELEVATION
WV	– EXISTING WATER VALVE	200	– EXISTING CONTOUR
GV	– EXISTING GAS VALVE		
24"	– EXISTING TREE AND SIZE		
~ts	– EXISTING TOP OF SLOPE	~tw	– EXISTING TOP OF WALL
~bs	– EXISTING BOTTOM OF SLOPE	~bw	– EXISTING BOTTOM OF WALL

BOUNDARY & TOPOGRAPHIC SURVEY
TAX LOT 7 BLOCK 207
BOROUGH OF SOUTH PLAINFIELD, MIDDLESEX COUNTY, NEW JERSEY

EKA ASSOCIATES, P.A.
Engineers • Surveyors • Planners
328 Park Avenue, Scotch Plains, N.J. 07076
908-322-2030

REVISIONS:
1/6/2020 – PER STORM GRATE INVERT

James R. Watson 1/6/2020

JAMES R. WATSON P.L.S., P.P.
PROFESSIONAL LAND SURVEYOR
N.J. LICENSE NO. 30750
N.Y. LICENSE NO. 50196
PROFESSIONAL PLANNER
N.J. LICENSE NO. 3363

Job No. 847319	Date 11/26/2019	Scale 1" = 20'	Drawn CD	Map No. FILE	Sheet 1 of 1